THE APPRENTICE SCHOOL STUDENT SECTION OF
THE SOCIETY OF NAVAL ARCHITECTS AND MARINE ENGINEERS

14TH ANNUAL



2021 Boat Design Competition Guidelines

Published: April 1, 2020

Newport News Shipbuilding
A Division of Huntington Ingalls Industries

REVISIONS

A list of select, important changes to the Guidelines from year to year.

Revision	Page	Description
2021	5	Incorporated changes from elongating design phase.

TABLE OF CONTENTS

Revisions 2

Competition Overview 5
Key Dates 5

Phase I: Registration Phase 6
Form a Team 6
Boat Design Competition Website 6
Questions and Answers 6
Register 6
Surveys 6
Competition Liaison 6
Team Mentor 6
Withdrawal 6

Phase II: Design Phase 7
Design Phase Parameters 7
Final Design Package 7
Design History Notebook 8
Drawing Set 8
Calculations Packet 8
Design Phase Judging 9
Superlatives 9
Luncheon 9

Phase III: Construction & Test Phase 10
Construction 10
Boat Trials 10
Race Day 10
Awards Ceremony 10

Appendix A: Scenario 11
Required Payload 11
Race Courses 12

Appendix B: List of Materials 13
Construction Material 13
Optional Ballast 14
Propulsion 15
Steering 19

Appendix C: Design Spiral 22

Appendix D: Drafting Guidelines 24
Drawing Judging Criteria 25

Appendix E: Calculations 26
Speed 26
Weight & Center of Gravity 27
Displacement & Draft 28
Buoyancy 30
Stability 31
Trim 33
Maneuverability 34
Calculations Summary 35

Appendix F: Design Phase Judging Rubric 38

Appendix G: Test Phase Judging Rubric 44

Glossary 45

COMPETITION OVERVIEW

The Apprentice School, of Newport News Shipbuilding, Society of Naval Architects and Marine Engineers (SNAME) student section sponsors a boat design competition for high school students to increase awareness of the naval architecture profession and the shipbuilding industry. The competition engages students' math, science, and creative abilities and introduces them to engineering, drafting, project planning, and leadership principles.

Participating high schools will form one or more student teams and work independently to design a boat. The designs will be critiqued by a panel of judges (experienced members of the maritime industry) for thorough documentation decisions, proper drafting practices, and calculation accuracy.

Four designs will be selected as finalists and will be constructed by Newport News Shipbuilding. A head-to-head competition between the four constructed boats will take place at The Mariners' Museum in Newport News, Virginia on Lake Maury. A winner will be selected by a panel of judges evaluating the boat's hydrostatic characteristics, speed, and maneuverability.

Send comments and corrections of the Guidelines to: sname@as.edu.

Key Dates	
Phase I. Registration Phase Form a team and register.	**Registration Opens: September 1, 2020** **Last Day to Register: October 31, 2020**
Phase II. Design Phase Teams design their boat in accordance with competition Guidelines.	**Final Design Due: January 15, 2021**
Phase III. Construction & Test Phase Final four designs will be constructed and tested. A winner will be selected based on the boat's overall performance and the accuracy of the naval architecture calculations.	**Luncheon: March 26, 2021** **Boat Trials: April 30, 2021** **Race Day: May 1, 2021** **Rain Date: May 2, 2021**

PHASE I: REGISTRATION PHASE

Form a Team

A team may be formed for a class project, extra credit assignment, after school program, etc. Teams are limited to a minimum of two members and a maximum of six members. No student can be a part of two teams. There is no limit to the number of teams per school; however, only two teams per sponsor are eligible for finalist judging and only one team per school may place as a finalist. All registered teams are eligible for superlative awards.

Boat Design Competition Website

The Boat Design Competition website contains a variety of resources and additional information:

https://communities.sname.org/designcompetition

Questions and Answers

During the Design Phase, a Q&A file will be uploaded to the competition website. The Q&A file is compiled from teams' questions that may not be answered by these Guidelines. Questions judged as proprietary to a team's design will not be included in the Q&A. Q&A's from previous years are also available and may be beneficial to read; however, it should be noted that some questions are relevant to only that year's competition.

Register

The registration form is available on the competition website.

Surveys

Students will complete surveys upon registration and Final Design Package submittal. The surveys are designed to gauge the knowledge of each student before and after the project.

Competition Liaison

The Competition Liaison is responsible for notifying teams of registration status, assigning Team Mentors, and handling communication that involves all schools/teams.

Team Mentor

Each team will be assigned a Team Mentor. Teams are encouraged to ask their mentors questions throughout the design competition. Questions must be specific so that Team Mentors can elaborate. The Team Mentors shall not influence designs nor directly participate in completing any portion of the Final Design Package. Once a Team Mentor is assigned, all communication should be directed to the Team Mentor. Submitted questions and answers will be posted online for viewing by all teams (in accordance with Q&A). The Competition Liaison shall be contacted if a team has any issue with their assigned Team Mentor.

Withdrawal

If a team decides to withdraw from the competition, please notify the Competition Liaison.

PHASE II: DESIGN PHASE

Design Phase Parameters

Before beginning a design, review the Design Phase Judging Rubric and use the following list (downloadable from the competition website as a checklist) to avoid major point deductions:

- ☐ Boats shall be designed to be easily produced. No single plate can be curved in two planes (i.e. no complex curvature). Consider the distance between plates, the angles where plates meet, access to points where plates intersect, etc. when designing the boat since fabricators and welders need to overcome jobsite conditions. Note that there is no limit on the angle between plates (e.g. at a knife bow) because welds may be applied on the exterior of the hull instead.
- ☐ Maximum length (LOA) of twelve feet and maximum beam of fifty inches.
- ☐ Any hull shape is acceptable as long as it can be produced with only the materials provided and it does not violate these design parameters.
- ☐ Boats shall be designed with open hull(s) (i.e. no plating should render a portion of the hull inaccessible and no part of the hull should be enclosed/sealed).
- ☐ Catamarans/trimarans shall be designed with adequate structure supporting the hulls. Since there is usually minimal material between the hulls, the boats tend to flex in construction and transportation.
- ☐ Boats shall be able to adequately and reliably accommodate and secure the Steering Assembly and removable propulsion equipment. The Steering Assembly shall be located at least six inches above the load waterline.
- ☐ Boats shall have a minimum of six inches of freeboard along their entire length, even after being loaded with optional ballast. Though the absolute minimum requirement is six inches, teams should consider designing for a larger freeboard due to calculation rounding, approximations (inherent in Simpson's Rule), and error.
- ☐ Boats shall be able to carry the arranged payload and remain within these design parameters.
- ☐ Boats shall be unique and cannot be copies of past submittals.
- ☐ Final Design Package shall be submitted before end-of-day on date specified.

Final Design Package

A Final Design Package includes, but is not limited to, a Design History Notebook, a Drawing Set, and a Calculations Packet. An example Final Design Package is available at:

https://communities.sname.org/designcompetition/downloads/fdp

In addition to reviewing the Design Phase Judging Rubric, the online Final Design Package Submittal Checklist should be downloaded to ensure submittal completeness and accuracy:

https://communities.sname.org/designcompetition/downloads/checklists

Design History Notebook

The Design History Notebook is an informal, yet professional and orderly, journal/website/blog/video diary that contains the highlights of each team's meeting, concepts explored, difficulties encountered during the design phase, methods to correct those difficulties, and the rationale that led to the final design. Recounting a team's development, both personally and in the design of the product, is more than just simply stating what was completed during any given day. How the team goes about completing these tasks is the real essence of the journal. The team's travel through the Design Spiral should be explicitly documented in the Design History Notebook.

Illustrations, pictures, screenshots, etc. should be used to enhance the journal, but should not simply be inserted without reference, explanation, captioning, resizing, and cropping.

Additional material can be provided in the Design History Notebook to highlight a team's accomplishments, capture the additional work, and justify the design decisions. Examples of additional material include 3D-printed designs, schedules, budgets, and speed/maneuverability calculations.

A recorded Design History Notebook is expected to be as thorough as a written one.

While the Design History Notebook might not be as inherently important as the drawings or calculations, the Design History Notebook is nevertheless easy points and should not be neglected.

Drawing Set

Designs should be developed using standard computer-aided drafting (CAD) software. Autodesk Inventor and AutoCAD are recommended since both are free to students, used by the shipyard, and have extensive online help. A combination of both programs may also be beneficial. All models shall use the reference point instructed. Teams are required to develop all the necessary views and details needed for design and construction. Dimension the drawings using *standard* fractions (or decimal equivalents) of an inch. Try constructing the boat out of paper from only the finished drawings to verify that there are no missing dimensions. See the drafting appendix for drawing requirements.

Templates and 3D models of commonly used components can be found at:

https://communities.sname.org/designcompetition/downloads/cad

Calculations Packet

Teams will submit hydrostatic calculations of their boat. The accuracy of the calculations are essential; they will be judged for finalist selection and again compared to the actual boat's measurements on Race Day. Each calculation should be completed in accordance with the procedure outlined in the calculations appendix.

Design Phase Judging

A panel of judges will score each team's Final Design Package in the following areas:

- Design History Notebook
  - Explanation of Design
  - Format
  - Spelling & Grammar
- Drawing Set
  - Format
  - Efficient Construction
  - Effective Construction
- Calculations Packet
  - Completeness
  - Accuracy
- Design
  - Completeness
  - Payload (Pertinent to Specific Competition Year)

The rubric can be found in the Design Phase Judging Rubric appendix.

Superlatives

The superlative awards that may be available are:

- Best hull art/color scheme on the Luncheon Drawing inspired by scenario
- Best team name pun pertaining to scenario
- Best team logo (all logos must be original)
- Best Design History Notebook/Drawing Set/Calculations Packet
- Best Calculation Supplement Drawings
- Best Render on Luncheon Drawings
- Other exceptional qualities (e.g. lightest boat with largest payload or some variation thereof, best teamwork, etc.)

Luncheon

All teams will be invited to an announcement ceremony where the four winning designs will be announced as finalists. The four finalists will hail from four different schools. Superlative awards will also be announced. The luncheon is an opportunity for the students to network with professional shipbuilders and their competitors. Location, directions, and date will be provided at a later time.

PHASE III: CONSTRUCTION & TEST PHASE

Construction

The four finalists' designs will be built at Newport News Shipbuilding by students of The Apprentice School and skilled trade workers.

Boat Trials

Prior to Race Day, the finalists will be given the opportunity to inspect their constructed boats and perform trials to become comfortable with their boat's performance. Teams shall instruct the outfitters on any special adjustment of their Propulsion Motor.

Race Day

The four finalists will: (1) validate their design predictions by comparing the predicted calculated values with the actual hydrostatic values, (2) compete for best boat performance by operating the boats remotely through designated courses. All teams are invited to witness Race Day.

Races

This event is the culmination of the Boat Design Competition. The final four teams will compete in a series of races that will test their boats' speed and maneuvering capabilities while carrying the required payload, optional ballast, and meeting freeboard requirements. The event will consist of two stages of competition:

1st Stage – High Speed Race (See Figure 1)

- Determines the top speed of boat
- Course to be raced simultaneously by two teams
- Points awarded according to finishing order

2nd Stage – Scenario Race (See Figure 2)

- Assesses handling, stability, and maneuverability of boat
- Course to be raced separately by the teams
- Points awarded according to finishing order

The rubric can be found in the Test Phase Judging Rubric appendix.

Awards Ceremony

The Awards Ceremony is held on the same day as the races. The team with the highest point total will be the winner. Superlative awards will also be distributed.

The finalist teams will be allowed to keep their boats after the competition. However, safe transportation as determined by the competition officials shall be provided by the team to remove the boat from the competition site.

APPENDIX A: SCENARIO

Required Payload



Each boat, designed as the SS Anne, will be taking Snamémon trainers on a cruise to the various island regions of Lake Maury. Snaméballs will be held in the ship's hold. There is no minimum or maximum to the number of Snaméballs that can be carried. Bonus points are awarded in accordance with Appendix G.

Snaméballs must adhere to the following rules:

- Must sit in the bottom of the boat.
- Cannot be piled upon each other.
- Cannot be on different planes/levels.
- Can be bounded [on the side(s)] by structure to prevent rolling.

In other words, a boat's ability to carry Snaméballs is based off of the usable size of the boat's bottom plate. A boat with a slim profile could reasonably only be able to carry as little as one row of Snaméballs. If a flat bottomed boat is fashioned, then many Snaméballs could be carried.

Rationale for payload consideration should be detailed in the Design History Notebook. As the battery is the heaviest weight, consideration should be taken, especially for monohulls, to keep the battery low in the hull so as to not negatively affect the boat's stability.

Snaméballs weigh 0.101 lbs and are 1.68 inches in diameter.

To help ease the center of gravity calculations, treat a grouping of Snaméballs as a plane with a VMOM equal to 0.84 inches (1.68/2) multiplied by the weight of the grouping. The LCG is taken at the centroid of the plane.

Race Courses

1st Stage – High Speed Race

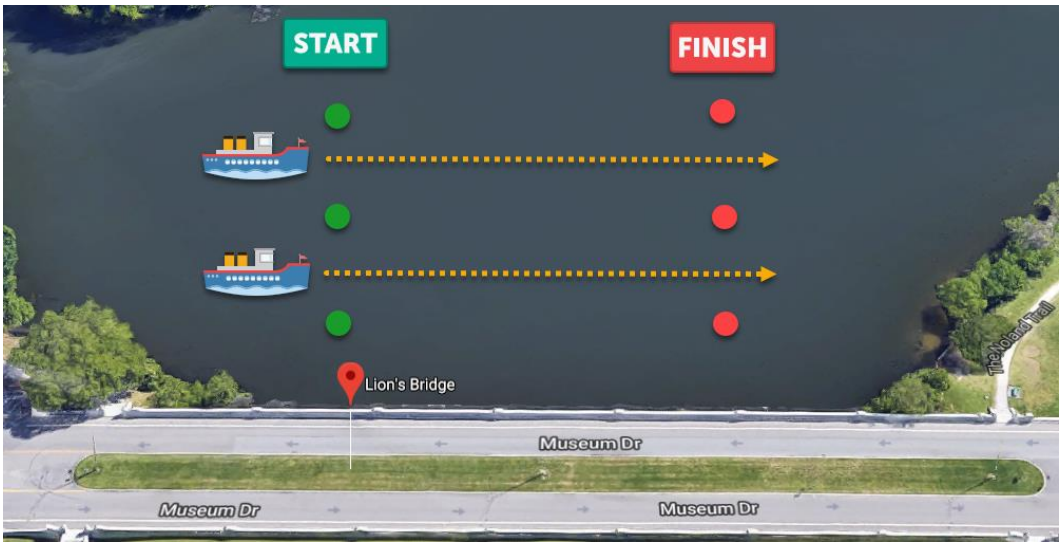

Figure 1 - High Speed Race Course
****Course is subject to change on Race Day****

2nd Stage – Scenario Race

Don't ram the water-type Snamémon indigenous to Lake Maury; they may flee! You may encounter such Snamémon as Orcaller, Dolphottle, Bluwhala, and Seaurtle.

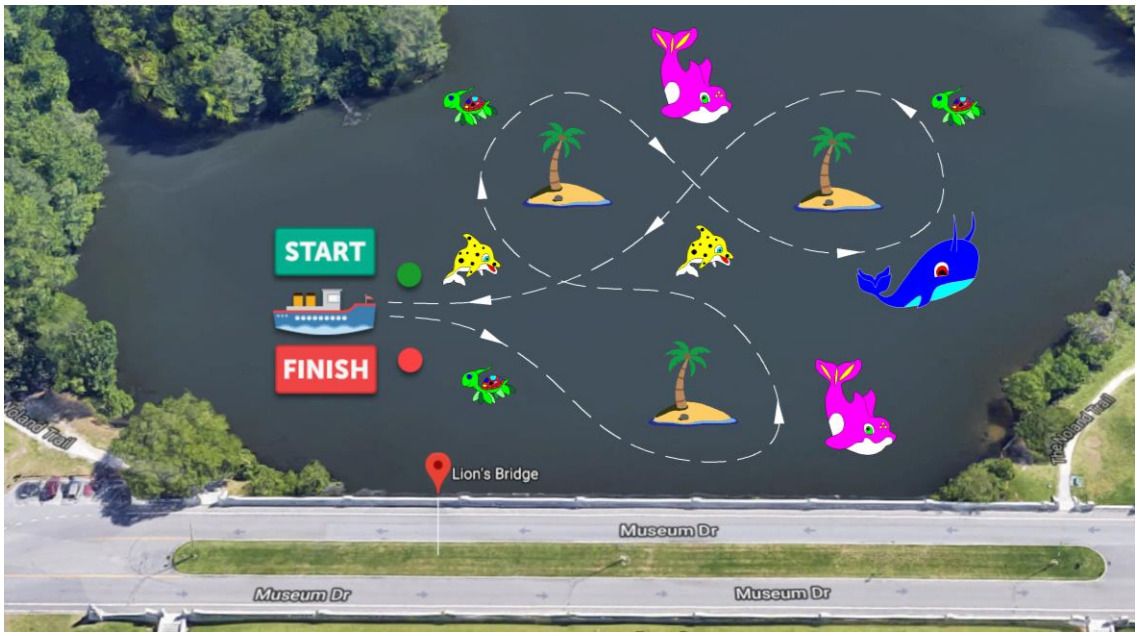

Figure 2 - Scenario Race Course
****Course is subject to change on Race Day****

APPENDIX B: LIST OF MATERIALS

Construction Material



(2x) Steel Plates

- Description: Used to construct the boat's hull(s). Weld metal is used to join the steel parts.
- Dimensions: 4' x 8' x 1/8"
- Density: 5.7 lbs/ft^2



(1x) Plywood

- Description: Used to construct the boat's rudder. Coated to prevent water absorption.
- Dimensions: 18" x 24" x 3/4"
- Density: 2.34 lbs/ft^2

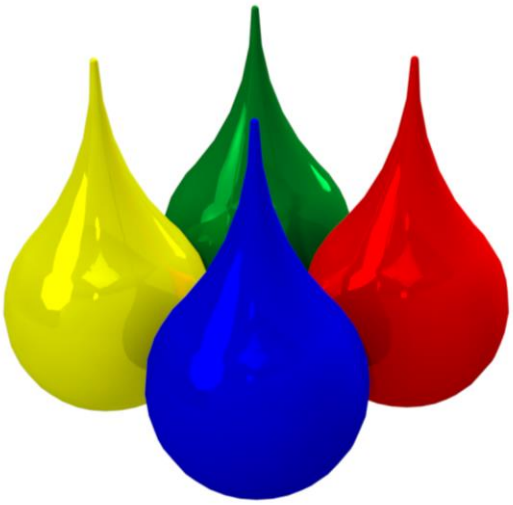

Paint

- Description: Used to coat the boat's hull(s) for appearance and corrosion protection.
- Colors:
  - Red
  - Yellow
  - Green
  - Blue

Teams do not need to specify a paint color; paint colors will be chosen by the construction team.

Teams should use the Luncheon Drawing and 3D model to express their creativity.

Optional Ballast



Water Jugs

- Description: One gallon jugs used as ballast in order to correct trim/list conditions. Jugs can be placed anywhere in the hull(s). Teams may elect to use none or as many as required. Jugs can be filled to any level with 62.4 lb/ft^3 water.
- Dimensions: 6" x 6" x 10" H (all approx.)
- Weight: As determined by the team
- Center of Gravity: Calculated by the team
- Special Requirements:
  - If a team anticipates the use of ballast, it shall be located and labeled (with required individual weight) on the Loading Diagram and figured into the calculations. Ballast shall be designed to be held in place to prevent shifting while underway.
  - Ballast accounts for total weight in the water and therefore will count towards the minimum freeboard requirement.

Propulsion



(1x) 12 Volt Marine Battery

- Description: Used to provide power to the Propulsion Motor and Steering Assembly. Sits within or on top of the boat.
- Dimensions: 13” x 7-1/4” x 9.5” H
- Weight: 51 lbs
- Center of Gravity: Geometric center of battery



(2x) Source Power Cables

- Description: Used to provide power from the battery to the Steering Assembly.
- Dimensions: 8’ long (maximum stretched dimension)
- Weight: Negligible
- Center of Gravity: Negligible

(2x) Jumper Power Cables

- Description: Used to relay power from the Steering Assembly to the Propulsion Motor.
- Dimensions: 5’ long (maximum stretched dimension)
- Weight: Negligible
- Center of Gravity: Negligible

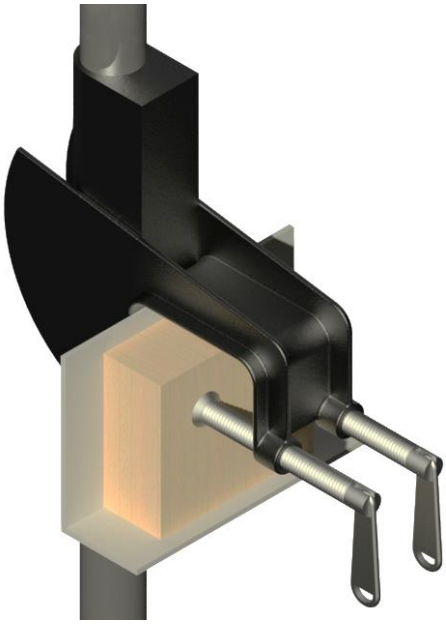

(1x) Motor Mount

- Description: A 2" x 4" angle bar fabricated from the steel allotment. Used to mount the Propulsion Motor.
- Dimensions: In accordance with Figure 3
- Weight: As determined by the team (block of wood is negligible)
- Center of Gravity: Calculated by the team
- Special Requirements:
  - Mount shall be shown on the Construction Drawings.
  - Required for catamarans with simple supports connecting the hulls. Monohulls, trimarans, and beefy catamarans may elect to use the Motor Mount or affix the Propulsion Motor to a plate or the transom, provided the support is of sufficient dimensions (i.e. larger than the Motor Mount), resists torsion, and clearance is provided to install the motor.



(1x) Bass Pro Shops® Prowler™ T55/40 [Propulsion] Motor

- Description: Used to propel the boat. The trolling motor is comprised of an electronic throttle located in the upper body, a mount and clamp screws, and a propeller capable of providing 55 pounds of thrust. The throttle is controlled remotely from shore.
- Dimensions: See Figure 4
- Weight: 17.8 lbs
- Center of Gravity: Midpoint of the 40 inch shaft
- Special Requirements:
  - Shall be able to be quickly attached/detached via the screw clamps without interference or require disassembly of other components or require disassembly of the motor itself (i.e. the motor is one piece). Clearance for *all* hull types shall be provided according to Figure 3. The clearance box is the imaginary three-dimensional envelope that allows the motor to be installed in one piece.
  - Motor will be in a fixed orientation relative to the boat during the race and cannot be turned while underway. Steering will be accomplished via the rudder instead. Adjustments (i.e. tilt, rotation, depth) shall be specified on the Loading Diagram if the adjustments differ from normal (upright, forward, perpendicular, depth in line with rudder, etc.).

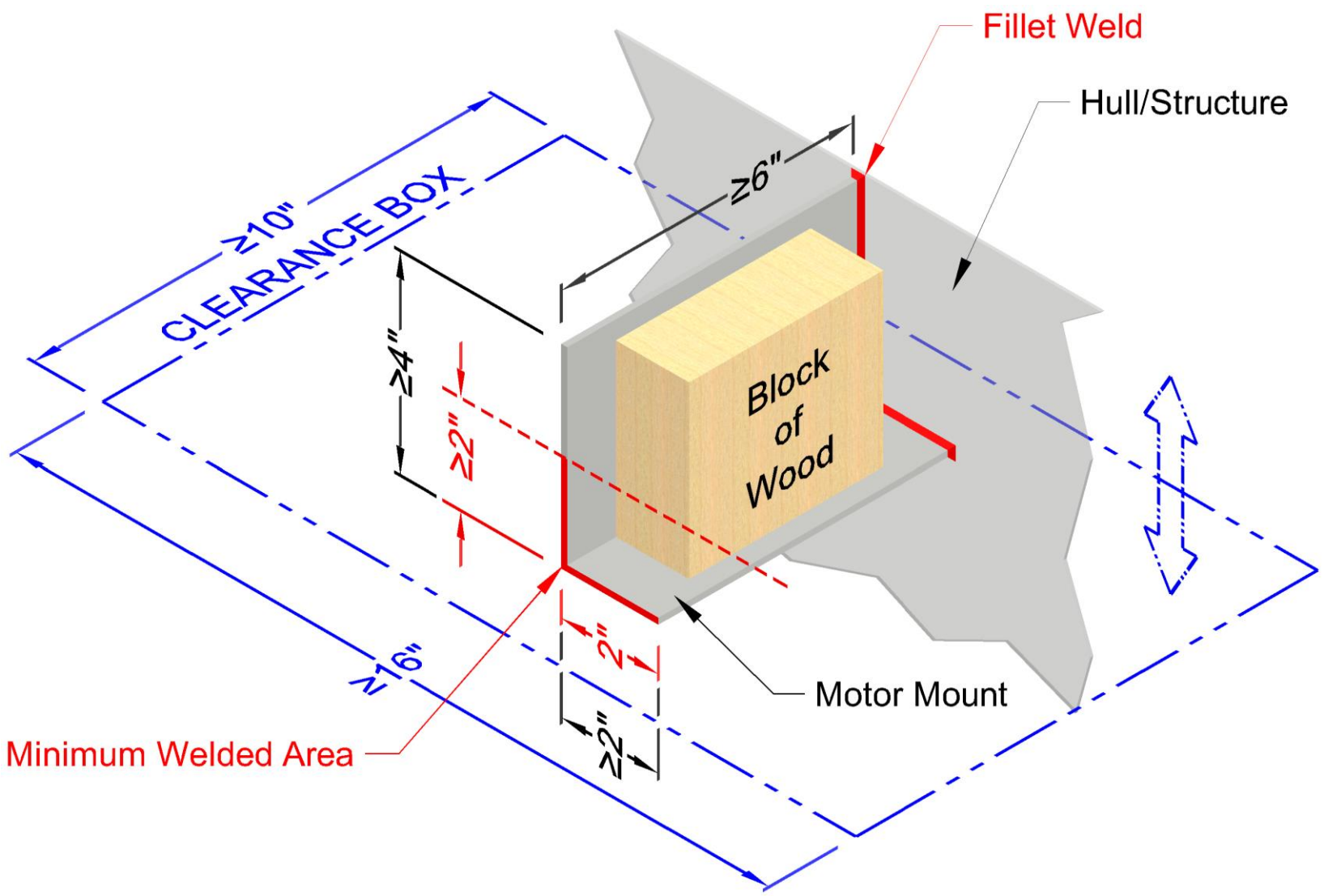

Figure 3– Motor Mount Template

1. Clamp Screws - allows for easy motor installation and removal. Mount the motor and then tighten the clamp screws securely. Mount can be positioned anywhere along and around the 40 inch shaft (i.e. the clamps can be facing 180° from the position shown in the figure
2. Tilt Position Pin - allows adjustment of the tilt of the motor.
3. Depth Collar Adjustment - the depth of the motor can be adjusted up and down by loosening the depth collar knob.

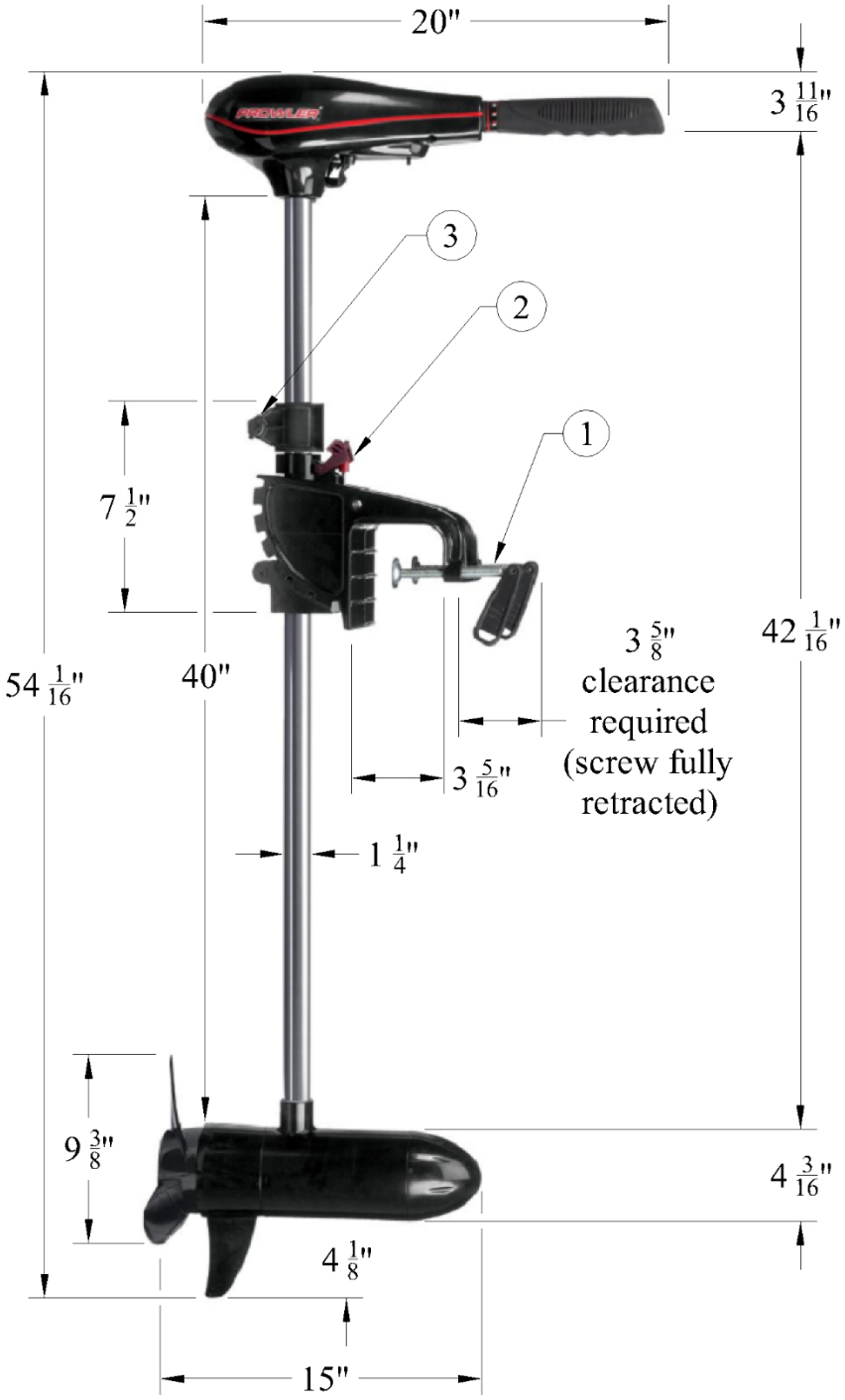

Figure 4 - Dimensioned Propulsion Motor

Steering

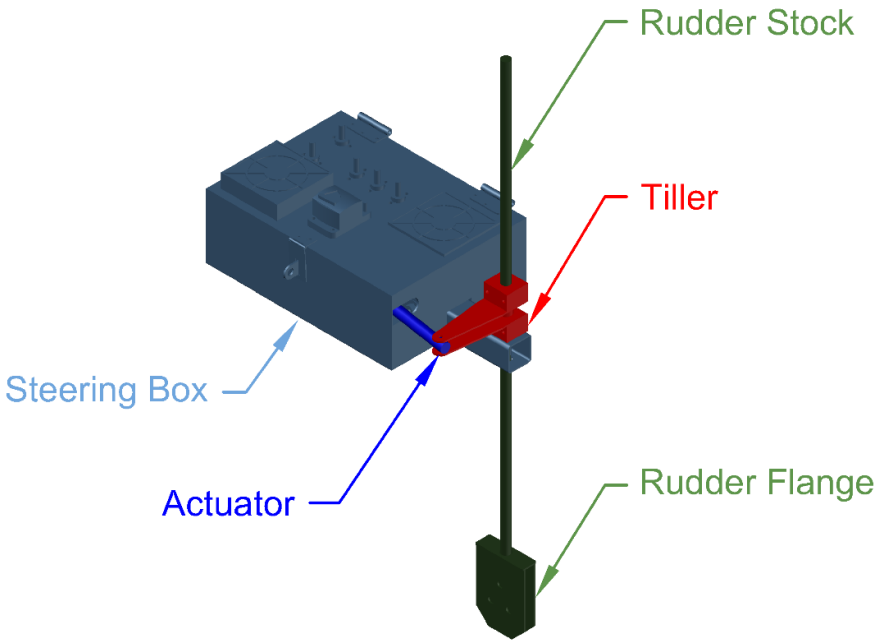

(1x) Steering Assembly (consists of a Steering Box, Actuator, Tiller, Rudder Stock, Rudder Flange)

- Description: Used to steer the boat. The assembly is controlled remotely from shore. The actuator is capable of rotating the rudder stock through 60° of rotation (i.e. 30° port and starboard from neutral position). The assembly is mounted to the boat via the Steering Box by three bolts.
- Dimensions (of Steering Box): 15-5/8" L x 11-3/8" W x 5-1/2" H
- Dimensions (of Rudder Stock): 3/4" diameter, 36" long
- Weight: 35 lbs
- Center of Gravity of Assembly (minus rudder): Geometric center of Steering Box
- Special Requirements:
    - Shall be able to be quickly attached/detached via the bolts without interference or require disassembly of other components or require disassembly of the assembly itself (i.e. the assembly is one piece). Clearance shall be provided according to Figure 5. The clearance box is the imaginary three-dimensional envelope that allows the assembly to be installed in one piece.
    - Shall be adequately and reliably secured, whether directly to the hull, a horizontal mounting plate, etc. Take into consideration torsion and utilizing breaks to stiffen plates. Mount must be *at least* as large as the **base** dimensions of the Steering Box (i.e. no slats). Mount can be larger than the dimensions of the Steering Box as long as the mounting holes are provided for, the design is sturdy, and the mount does not interfere with the rotation of the rudder stock. Mounting holes from Figure 5 shall be shown on the Construction Drawings.
    - Steering Box shall be located at least six inches above the load waterline.
    - Adjustment to the depth of the rudder stock shall be specified on the Loading Diagram if the adjustment differs from normal (i.e. rudder surface in line with propeller).

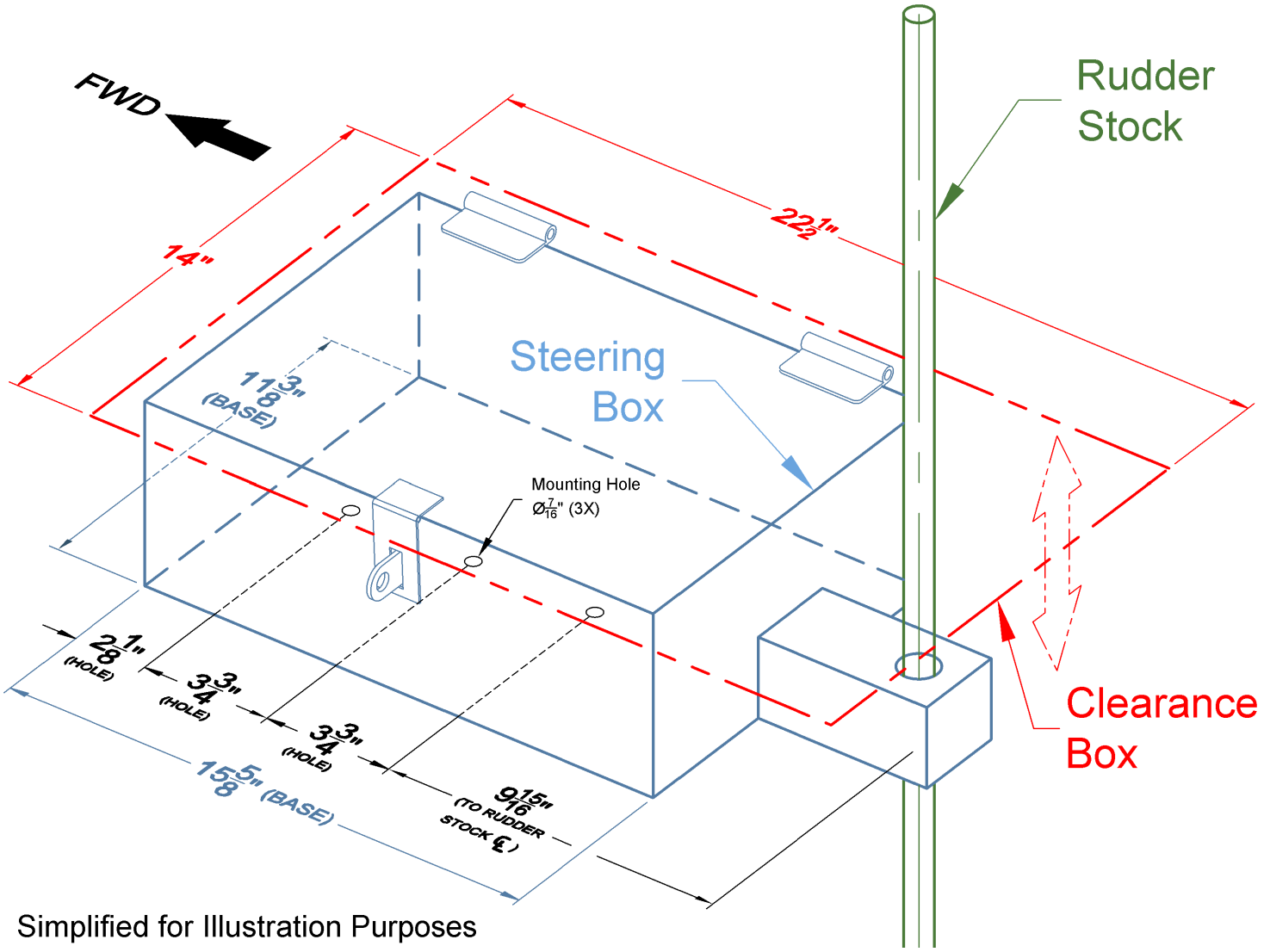

Figure 5 – Steering Assembly Template

(1x) Rudder (team-designed)

- Description: Surface used to steer the boat. Coated to prevent water absorption. Attached to the Rudder Flange by three screws (See Figure 6).
- Dimensions: As determined by the team
- Density: 2.34 lbs/ft^2
- Center of Gravity: Calculated by the team
- Special Requirements:
  - Shall be a single piece (i.e. cannot be made of several pieces bonded/bolted together).
  - Cannot be designed for contoured/beveled leading and trailing edges as this cannot be accomplished with plywood.
  - Dimensions, including pivoting centerline, shall be shown on the Construction Drawings.

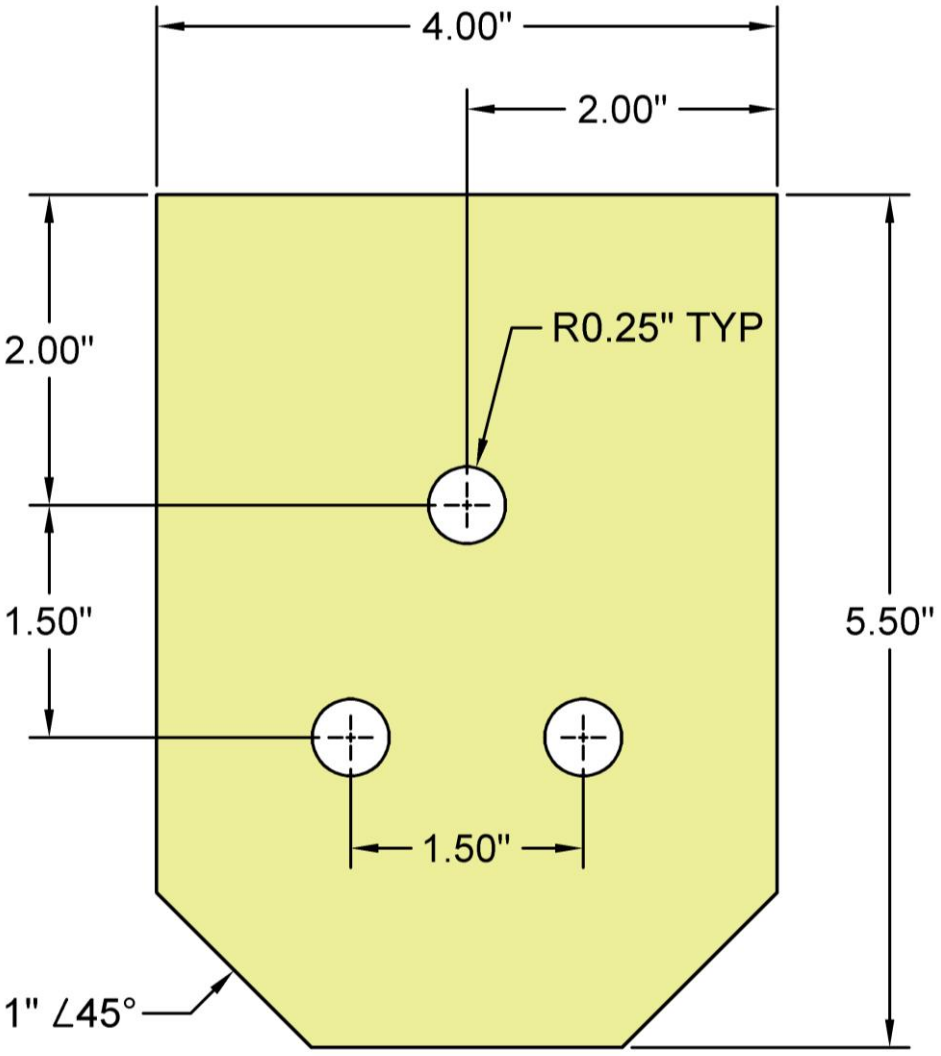

Figure 6 – Rudder Flange Detail

APPENDIX C: DESIGN SPIRAL

Ship design is typically an iterative process in which various aspects of the design are balanced in a certain order to arrive at an optimal design. Most of these broad requirements cannot be analyzed and/or determined independently of the other criteria on the Design Spiral. The Design Spiral and its parameters generally takes the following form:

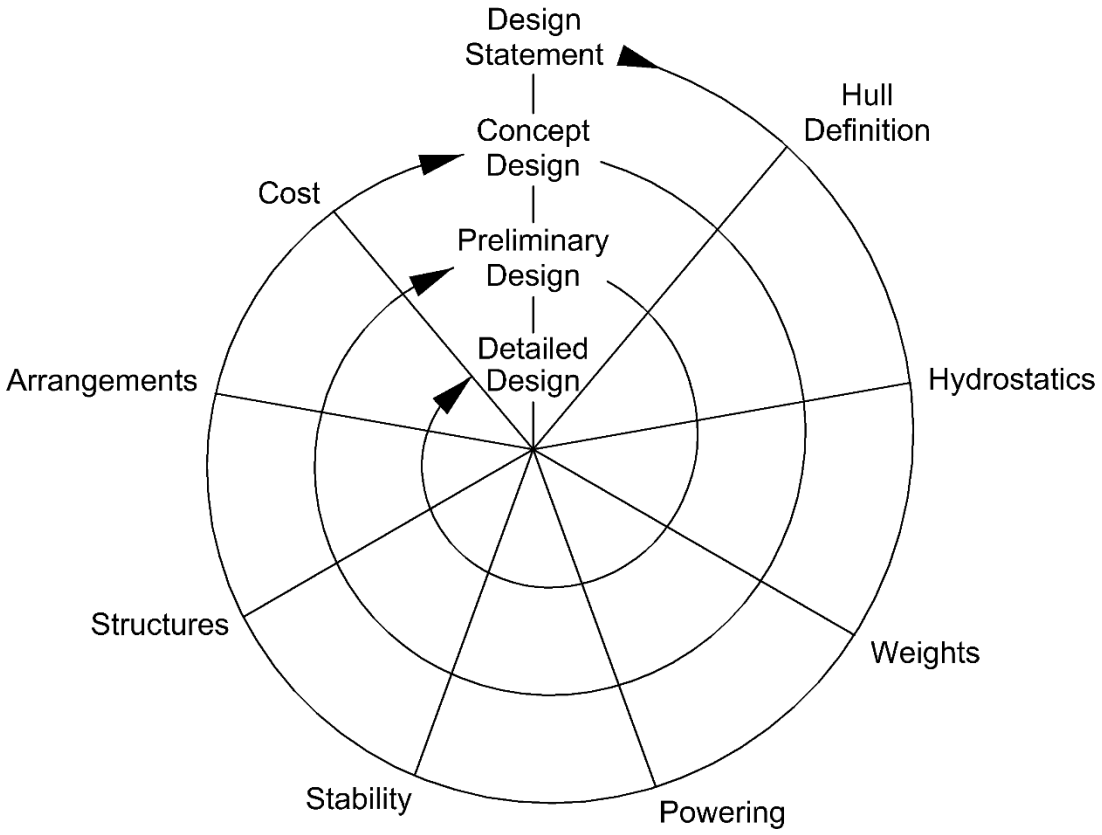

This general process can apply to a naval ship, a commercial ship, or something as simple as a row boat. The process starts very broad and progressively becomes more detailed as the design moves from the concept design phase, to preliminary design, and finally to detailed design. Each parameter is connected by both the spiral and by radial lines since the process is as much a consecutive one as it is a concurrent one. While the design will not necessarily address each of the parameters, it can provide a useful approach to designing a boat. The process starts with defining the mission of the boat in a one or two sentence design statement based on the prospective owner's requirements.

Hull Definition: Determine the general shape of the hull and its principal dimensions. Later steps involve the creation of a lines drawing for the ship which describes the hull form in detail.
Speed: Speed calculations require effort, modeling, and calculations beyond the scope of this competition. Calculations are not required to predict the actual speed of the boat for this competition; however, recommendations are provided in the calculations appendix.

Maneuverability: Maneuvering calculations require effort, modeling, and calculations beyond the scope of this competition. Calculations are not required. However, methods to size the rudder are provided in the calculations appendix.

Hydrostatics: Consider the properties of the hull as it sits at rest in the water. This includes the volume, displacement, design waterline, center of buoyancy, and metacentric height of the hull.

Weights: Estimate the weight of all shipboard structure and components and their location and determine the boat's weight and its center of gravity.

Powering: While the Propulsion Motor is already chosen, propulsion considerations normally include speed, fuel availability, fuel rate, space, and weight.

Stability: Calculate the boat's tendency to right itself when its position in the water is disturbed by an outside force like wind or waves. Stability is critical to the safety and comfort of the boat and its passengers and cargo.

Structure: Design the structure needed to maintain structural integrity through all sea and weather conditions that the boat can expect to see during its lifetime. Considerations include type of material, thickness of the material, the location and size of all frames, and how the materials are joined to one another.

Arrangements: Determine how much space each function of the boat requires and where that space should be located for the most efficient operation of the boat. The final step in determining the boat's arrangement is to develop a detailed plan of the boat depicting every space on the boat, its purpose, as well as how equipment will be located in each space.

Cost: It is important to consider the cost of the boat as the final parameter during each pass through the Design Spiral. Cost estimation consists of an educated guess as to what materials and labor will be required for the construction of the boat.

From this point forward, the designer continues to follow the steps of the spiral, re-examining each parameter in more detail than on the previous pass. The team's travel through the Design Spiral should be documented in the Design History Notebook.

A description of the overall design process for a boat can be found in "The Design Spiral for Computer-Aided Design" by Stephen Hollister at www.newavesys.com/spiral.htm.

APPENDIX D: DRAFTING GUIDELINES

The four drawings required for this competition are:

1. Design Drawing: The Design Drawing will include the body, plan, sheer, and isometric views of the *structural* design (i.e. excluding the Steering Assembly, payload, etc.). Any additional views that help visualize the completed design may be included on additional sheets. The principal dimensions shall be compiled in a table. Principal dimensions that can be shown as labeled dimension lines shall also be included on the views most appropriate to receive them. These should be the *only* dimension lines on the Design Drawing.

   Principal Dimensions:
   - Length Overall
   - Length at Waterline
   - Length Between Perpendiculars
   - Beam
   - Depth
   - Draft
   - Displacement (Unloaded)

2. Loading Diagram: The Loading Diagram will include the body, plan, sheer, and isometric views of the *loaded* design. Any additional views that help visualize the completed design may be included on additional sheets. The payload, Steering Assembly and Propulsion Motor (including any special adjustments), battery, and optional ballast (with individual weight) shall be labeled. Locating dimensions/wording shall be used for clarity when needed. The following principal dimensions shall be compiled in a table:

   Principal Dimensions:
   - Displacement (Loaded)
   - Number of Snaméballs carried

3. Nesting Plan: The Nesting Plan is a full-sized 2D drawing that shows the layout of each piece on the steel plates to show that all required pieces can be cut from the provided material. Each piece on the Nesting Plan should be numbered according to the Construction Drawing's bill of material. A 1/2 inch gap between pieces is required since the width of the cutting tool must be accounted for.

4. Construction Drawings: The Construction Drawings shall provide the views, details, dimensions, bill-of-material, reference lines/planes, part numbers (corresponding to material list), and notes necessary for the construction of the boat *and* the rudder (including its pivoting dimension). Mounting holes of Steering Box shall be shown.

Additionally, optional drawings for this competition include:

1. Luncheon Drawings: Since the designs will be showcased at the Luncheon for competitors and officials to view, additional drawings may be provided. These creative drawings may use any paint scheme/hull art and can consist of additional views or renderings. Label all Luncheon Drawings specifically as such. Luncheon Drawings shall be submitted separately from the rest of the Drawing Set.

2. Calculation Supplement Drawings: These drawings help enhance the Calculations Packet and illustrate [to the judges] that the calculations were performed correctly. By compiling these drawings, team members can develop a better understanding of the methods used and readily spot mistakes in the calculations. Calculation Supplement Drawings shall be submitted separately from the rest of the Drawing Set.

   Examples of these drawings may include: showing waterplane and station areas of the hull, showing the design waterplane area and attributes, showing centers of gravity and buoyancy, and showing trimmed conditions.

Drawing Judging Criteria

Bending and breaking allows for the transition of the hull form without the need for welding, thus simplifying the construction. Bending and breaking are not required; however, because they decrease welding, teams will be judged (in accordance with the Design Phase Judging Rubric) on how bends and breaks are used to simplify the construction. A team's design that could have benefited from bends/breaks, but did not specify any, will score lowly. If a team's design could *not* have implemented bends/breaks, then that team will not be penalized for not specifying any bends/breaks. For instance, a team that designs a box will not be given any points for a Nesting Plan that shows five separate pieces because every seam would require welding (as opposed to an unfolded piece).

While utilizing bends/breaks is encouraged, it is important to understand that the finished boat may differ slightly from the design. The experienced lofting department of the shipyard may rearrange pieces of a nesting plan to best suit fabrication. This should not hinder a team from utilizing bends/breaks on the design.

APPENDIX E: CALCULATIONS

All required calculations for the Final Design Package are indicated in Calculations Summary sheets. These values are considered the final answers.

All work behind the calculations should be shown. Work should be neat and organized. Use the templates found online:

https://communities.sname.org/designcompetition/downloads/calcs

Any additional medium to convey work (e.g. notes, screenshots, etc.) may also be submitted as part of the Calculations Packet file.

All numbers (except those of the Calculations Spreadsheet) should be accompanied by units.

All calculations may be calculated manually. Values from CAD programs may only be used when instructed. Show work behind calculations that are not lifted from a CAD program.

Round all decimals [that are not expressed as equivalents of a ruler] to two places.

The reference point from the Glossary shall be used.

Calculation tutorials are available online via YouTube:

https://communities.sname.org/designcompetition/videotutorials

Speed

Listed below are some good practices that should be followed to maximize the boat's speed. These calculations are not required, as indicated by the Calculations Summary sheets; however, if followed, they should be discussed in the Design History Notebook.

1. Design for a length to beam ratio of between 6 and 8. Within this range, the higher ratio should lead to a faster boat.
2. Finer hull forms go faster than fuller hull forms (block coefficient).
3. Minimize the wetted surface to reduce friction.
4. Minimize abrupt transitions and shapes to streamline the hull.

Weight & Center of Gravity

- *All* weights (steel, battery, payload, etc.), including the anticipated use of optional ballast (this may be a condition that will need to be reconsidered based on results from draft and trim later on) contribute to displacement and need to be tallied.
- All steel pieces should be an individual row (i.e. regardless of breaking or welding).

Do the following to complete the Weight tab of the Calculations Spreadsheet:

1. Steel pieces are to be entered in the buff-colored section while components (i.e. those that do not contribute to the weight of the unloaded boat) are to be entered in the red-colored section. Delete any unused rows.
2. Enter the side that the part is on (i.e. port/starboard for a monohull or port inboard, port outboard, etc. for multiple hulls). Type center if the part lies on the centerline.
3. Enter the part number that corresponds to the material list on the drawings.
4. Enter the part's description.
5. Enter the part's bounded dimensions (if a plate is curved, use the dimensions before bending since the volume of the plate is unchanged). Leave blank for components.
6. Label the general shape of the part. Leave blank for components.
7. Calculate the part's area from CAD (or by using the appropriate geometric equation) in conjunction with the Nesting Plan. Leave blank for components.
8. Enter the part's density. Leave blank for components.
9. Calculate the part's weight. Enter component weights as given by the Guidelines.
10. Enter the VCG, LCG, and TCG for each part. These are the vertical, longitudinal, and transverse distances respectively from the reference point to the part's individual center of gravity. Follow the sign convention.
11. Calculate the VMOM, LMOM, and TMOM (the moments that each part exerts from the reference point) for each part by multiplying the weight by the distance.
12. Sum the weights, VMOM, LMOM, and TMOM columns for both loaded and unloaded (i.e. structural) conditions. Find the composite VCG, LCG, and TCG of the entire loaded boat (together they make up the three-dimensional location of the CG):

$$\text{VCG} = \frac{VMOM_{Total}}{Weight_{Total}} = _____$$

$$\text{LCG} = \frac{LMOM_{Total}}{Weight_{Total}} = _____$$

$$\text{TCG} = \frac{TMOM_{Total}}{Weight_{Total}} = _____$$

Understanding the Results

The weight of the boat is crucial because it affects every other calculation. If the port and starboard sides of the hull are symmetrical and all additional weights are on the boat's centerline, the TCG should equal zero (a TCG other than zero complicates subsequent calculations unless the angled waterplane/station areas are accounted for). Likewise, the boat will not list.

Displacement & Draft

Unless the boat's volumetric displacement is linear with draft or the shape of the hull is simple (or the team makes a perfect initial guess), finding the point where the weight of the boat equals the volumetric displacement requires repeated calculations. For accuracy, this volume will be found by using both waterplane areas and station areas. Each has a dedicated tab in the Calculations Spreadsheet and will be completed using an iterative process as outlined below (only the last iteration needs to be submitted in the Final Design Package):

1. Using waterplane areas and the Waterplane Area tab of the Calculations Spreadsheet:
    a) Estimate a draft (that correlate to ruler equivalents) in the header.
    b) With a minimum of nine waterlines from the baseline (0) to the estimated draft (8), find the distance from each waterline to the baseline. The end cell in this column should match the draft guess in a). Extra rows may be added to accommodate a greater amount of waterlines.
    c) Fill the header with the h value, where h is the spacing between the waterlines. This spacing should equal any cell in b) subtracted by an adjacent cell.
    d) Determine the areas of each waterplane associated with each waterline.
    e) Determine the sequencing of Simpson's Multipliers.
    f) Multiply the area by the multiplier and sum entire column [$\Sigma f(V_i)$ is equivalent to everything in the parentheses of Simpson's Rule equations].
    g) Find volumetric displacement, displacement (in lbs), and draft:

$$\nabla = \frac{h}{3}\left(\sum f(V_i)\right) = _____$$

$$\text{Convert from in}^3 \text{ to ft}^3 \Rightarrow \frac{\nabla}{1728\ {}^{in^3}/_{ft^3}} = _____$$

$$\Delta = \nabla * 62.4\ {}^{lb}/_{ft^3} = _____$$

2. Using station areas and the Station Area tab of the Calculations Spreadsheet:
    a) Estimate a draft (that correlate to ruler equivalents) in the header.
    b) With a minimum of nine stations from the FP (0) to the AP (8), find the distance from each station to the FP. The end cell in this column should match the LBP of the boat. Extra rows may be added to accommodate a greater amount of stations.
    c) Fill the header with the h value, where h is the spacing between the stations. This spacing should equal any cell in b) subtracted by an adjacent cell.
    d) Determine the partial area (from baseline to estimated draft) of each station.
    e) Determine the sequencing of Simpson's Multipliers.
    f) Multiply the area by the multiplier and sum entire column [$\Sigma f(V_i)$ is equivalent to everything in the parentheses of Simpson's Rule equations].
    g) Find volumetric displacement, displacement (in lbs), and draft:

$$\nabla = \frac{h}{3}\left(\sum f(V_i)\right) = _____$$

$$\text{Convert from in}^3 \text{ to ft}^3 \Rightarrow \frac{\nabla}{1728\ {}^{in^3}/_{ft^3}} = _____$$

$$\Delta = \nabla * 62.4\ {}^{lb}/_{ft^3} = _____$$

Understanding the Results

If the displacement is greater than the weight of the boat, then the team has overestimated the draft. Repeat the iteration using areas calculated to a lower draft. Repeat vice versa if the team has underestimated the draft. Iterations should be discontinued when displacement and weight are within ten pounds of each other.

Further increasing the number of areas (e.g. a boat can have complicated waterplanes in relation to relatively simple stations) can increase the accuracy of Simpson's Rule.

The density of the lake water is 62.4 lb/ft^3. If the boat were to be placed in a denser environment (e.g. seawater), its displacement and draft would be different.

Choose whether the calculations from waterplanes or stations will be carried throughout the remaining calculations:

$$\text{Choice} = _____$$

Write down the area of the design waterplane (the waterplane at the design waterline/draft):

$$A_{WP} = _____$$

Calculate the PPI immersion:

$$\text{PPI} = \frac{A_{WP}}{27.7\ {}^{in^3}/_{lb}} = _____$$

Buoyancy

The vertical center of buoyancy can be found by filling in the last two columns of the Waterplane Area tab of the Calculations Spreadsheet by generating a moment about the baseline using the waterline heights as moment arms. The moment, or lever arm, indicates how many "h" values the waterline is away from the baseline. Therefore, the first number in the column is a zero. Multiply each waterplane area by the Simpson's Multiplier and the vertical lever arm to find the last column. Sum the column and solve:

$$\text{VCB} = \frac{h * \sum f(V_i N_i)}{\sum f(V_i)} = _____$$

A low VCG, especially when compared to the VCB, is appreciable. The formula below is an approximation included to help determine if the VCB is correct:

$$\text{VCB}_{\text{Approx}} = T * \left[\frac{A_{WP}}{A_{WP} + {\nabla}/{T}}\right] = _____$$

The longitudinal center of buoyancy can be found by filling in the last two columns of the Station Area tab of the Calculations Spreadsheet by generating a moment about the bow using the station spacing as moment arms. The moment, or lever arm, indicates how many "h" values the station is away from the bow. Therefore, the first number in the column is a zero while Station 3 is three stations from Station 0. Multiply each station area by the Simpson's Multiplier and the longitudinal lever arm to find the last column. Sum the column and solve:

$$\text{LCB} = \frac{h * \sum f(V_i N_i)}{\sum f(V_i)} = _____$$

The longitudinal center of flotation can be found using the CAD program. It is the geometric centroid of the design waterplane:

$$\text{LCF} = \text{(from CAD)}_____$$

Understanding the Results

A TCB is not found since, when the boat is upright, it is equal to zero in a geometrically symmetrical hull (almost always the case).

Stability

The boat's stability is determined by the relationship between the center of gravity, the center of buoyancy, and a point called the metacenter. For the equations below to work as is, ensure the x-axis is aligned along the centerline and the y-axis is parallel to the waterplane. Moment of inertias may be easily calculated by hand if the waterplane is composed of simple geometric shapes. These formulas are readily available online by searching for second moment of area/area moment of inertia (this should not be confused with mass moment of inertia, which is more commonly known as moment of inertia).

Use the following process to find the transverse metacenter relationships:

Find the transverse moment of inertia of the design waterplane:

$$I_T = I_{CL} = I_X = (\text{from CAD}) _____$$

Calculate the transverse metacentric radius:

$$BM_T = \frac{I_T}{\nabla} = _____$$

Then calculate the distance between the keel and the transverse metacenter:

$$KM_T = VCB + BM_T = _____$$

Finally, calculate the transverse metacentric height:

$$GM_T = KM_T - VCG = _____$$

Repeat the process to find the longitudinal metacenter relationships:

Find the longitudinal moment of inertia of the waterplane at the design waterline (if the UCS in the CAD program is located at the center of flotation, then the parallel axis theorem is not needed; otherwise the parallel axis theorem applies to shift the reference point from the bow to the LCF):

Parallel axis theorem:

I_y=(from CAD)_____

$I_L = I_{LCF} = I_y - A_{WP} * LCF^2 =$ _____

where: A_{WP} is the area of the design waterplane
LCF is the distance from the bow to the center of flotation

If the parallel axis theorem is not used, then I_y from CAD is already the longitudinal moment of inertia:

$I_L = I_{LCF} = I_y =$ (from CAD)_____

Calculate the longitudinal metacentric radius:

$$BM_L = \frac{I_L}{\nabla} = _____$$

Then calculate the distance between the keel and the longitudinal metacenter:

$$KM_L = VCB + BM_L = _____$$

Finally, calculate the longitudinal metacentric height:

$$GM_L = KM_L - VCG = _____$$

Understanding the Results

The transverse moment of inertia should be smaller (if the boat is longer than it is wider) than the longitudinal moment of inertia. Likewise, GM_T should be smaller than GM_L. This is plausible since GM represents initial stability and a boat much more easily capsizes from rolling over on its side than pitchpoling (capsizing end-on-end).

Trim

Find the moment required to trim the boat one inch (units do not simplify). It requires the displacement in pounds, GM_L in inches, and the LWL in inches:

$$\text{MT1"} = \frac{\Delta * GM_L}{LWL} = _____$$

If the LCB and LCG are located in the same spot along the length of the boat, then there will be no trim. If the LCG is forward of the LCB, then the boat will trim by the bow (bow deeper in the water) and vice versa. Calculate the trim by multiplying the displacement in pounds times the difference in inches between the LCB and LCG and divide by the MT1":

$$\text{trim} = \frac{\Delta * (LCB - LCG)}{MT1"} = _____$$

Use the absolute value of the trim for the following equations since the plus-minus sign takes care of the trim condition (e.g. if the boat trims by the bow, then $T_F = T_M + f$ and $T_A = T_M - a$, while the signs are opposite if the boat trims by the stern). For the purposes of the Boat Design Competition, T_M is the design draft. Calculate the drafts at the bow and stern:

$$f = \left(\frac{LCF}{LWL}\right) * |trim| = _____$$

$$T_F = T_M \pm f = _____$$

$$a = |trim| - f = _____$$

$$T_A = T_M \pm a = _____$$

The minimum required freeboard as specified in the Design Phase Parameters is six inches. This is required along the entire length of the hull (i.e. an eight inch freeboard at the stern does not compensate for a four inch freeboard at the bow).

$$\text{Freeboard (at bow)} = D - T_F = _____$$

$$\text{Freeboard (at stern)} = D - T_A = _____$$

Understanding the Results

Boat design is an iterative process. If the freeboard does not meet the criteria, then the process needs to be reworked. Also, just like TCG, trim affects the assumed waterplane and station areas that were used to calculate displacement (though in this case displacement was calculated before being able to calculate the trim). The larger the trim, the more likely the previous calculations are incorrect since the boat was assumed to be upright and level when calculating areas.

Maneuverability

The following are recommendations. Estimate the rudder size using the Det Norske Veritas formula below:

$$A = \frac{T * LWL}{100}\left[1 + 25\left(\frac{B}{LWL}\right)^2\right]$$

where:

A = area of rudder
T = draft
LWL = length at waterline
B = beam

This equation was originally intended for ships, so to make it applicable to boats reminiscent of the Boat Design Competition, multiply the answer by the square root of the length at waterline. The following equation should be done in both feet and inches so that a reasonable rudder size can be chosen from the two:

$$A' = A * \sqrt{LWL}$$

If the rudder is designed too small, maneuverability will be sacrificed. If the rudder is designed too large, speed will be sacrificed since the rudder area will create additional drag.

If designing a traditional quadrilateral rudder, use the rudder area to determine a suitable ratio between the height, root, and tip lengths shown below (rudder stock is 1/3 the root distance):

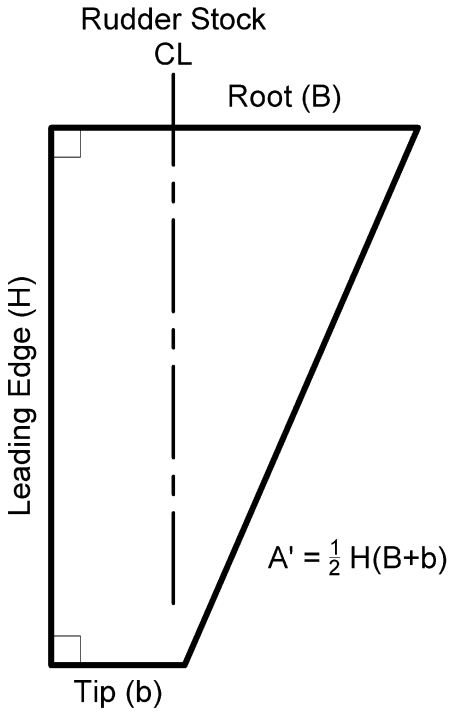

Calculations Summary

Reference

Length Overall, LOA [≤ 144”]	
Length at Waterline, LWL (determine after draft)	
Beam [≤ 50”]	
Depth, D	
Mean Draft, T_M (choose one from below)	

Weight & Center of Gravity

Weight (Loaded), Δ (from Calculations Spreadsheet)	
Weight (Unloaded), Δ (from Calculations Spreadsheet)	
Vertical Center of Gravity, VCG	from baseline
Longitudinal Center of Gravity, LCG	from FP
Transverse Center of Gravity, TCG	from centerline

Displacement & Draft

From Waterplane Areas:

Draft, T _____

Volumetric Displacement, ∇ _____

Displacement, Δ _____

From Station Areas:

Draft, T _____

Volumetric Displacement, ∇ _____

Displacement, Δ _____

Area of Design Waterplane, A_{WP} _____

Pounds Per Inch of Immersion, PPI _____

Buoyancy

Vertical Center of Buoyancy, VCB _____ from baseline

Longitudinal Center of Buoyancy LCB _____ from FP

Longitudinal Center of Flotation, LCF _____ from FP

Stability

Transverse Moment of Inertia, I_T _____

Transverse Metacentric Radius, BM_T _____

Transverse Metacenter, KM_T _____ from baseline

Transverse Metacentric Height, GM_T _____

Longitudinal Moment of Inertia, I_L _____

Longitudinal Metacentric Radius, BM_L _____

Longitudinal Metacenter, KM_L _____ from baseline

Longitudinal Metacentric Height, GM_L _____

Trim

Moment to Trim One Inch, MT1” _____

Trim _____

Difference Between Bow Trim and Draft, f _____

Draft (at bow), T_F _____

Difference Between Stern Trim and Draft, a _____

Draft (at stern), T_A _____

Freeboard (at bow) [≥ 6”] _____

Freeboard (at stern) [≥ 6”] _____

APPENDIX F: DESIGN PHASE JUDGING RUBRIC

DESIGN HISTORY NOTEBOOK					
JUDGING CRITERIA		**Poor** (0 pts)	**Fair** (3 pts)	**Good** (6 pts)	**Excellent** (9 pts)
EXPLANATION OF DESIGN	**Design Spiral**	Incorporation of design journey (Design Spiral) lacking	Incorporation of design journey (Design Spiral) is minimal	Incorporation of design journey (Design Spiral) needs improvement	Incorporation of design journey (Design Spiral) is thorough
	Illustrations	Most (5+) illustrations are not helpful/not needed; no illustrations used	Some (3-4) illustrations are not helpful/not needed	Few (1-2) illustrations are not helpful/not needed	Appropriate illustrations are used to complement the understanding
	Content	Overall content lacking	Minimal content, wording, and explanation given	Content , wording, and explanation needs improvement	Content, wording, and explanation thorough
	Payload	Payload consideration not mentioned	Payload consideration mentioned	Payload consideration explained	Payload consideration elaborated
FORMAT	**Team Name** (9 pts unless as directed by Lead)	Team name is unprofessional; not included	N/A		Team name is professional
	Appearance	Many (5+) unprofessional errors; unprofessional	Some (3-4) semiprofessional errors	Few (1-2) semiprofessional errors	Professional appearance
	Organization	Dates/headings not included	Separation of meetings is difficult to decipher, flow interrupted	Some improvement to flow or organization needed	Dates/headings/formatting helps distinguish meetings, easy to follow
	Illustrations	No illustrations are used or many (5+) illustrations are not labeled/referenced, aligned, sized, and cropped	Some (3-4) illustrations are not labeled/referenced, aligned, sized, and cropped appropriately	Few (1-2) illustrations are not labeled/referenced, aligned, sized, and cropped appropriately	All illustrations are labeled/referenced, aligned, sized, and cropped appropriately
SPELLING & GRAMMAR	**Spelling** (9 pts if completed via video/no text)	Spelling errors throughout (10+)	Abundant (4-9) spelling errors	Few (1-3) spelling errors	No spelling errors
	Grammar	Grammatical errors throughout (10+)	Abundant (4-9) grammatical errors	Few (1-3) grammatical errors	No grammatical errors

DRAWING SET					
JUDGING CRITERIA		**Poor** (0 pts)	**Fair** (3 pts)	**Good** (6 pts)	**Excellent** (9 pts)
FORMAT	**Design**	(3+) errors of the following: principle dimensions (whether tabulated or dimensioned) missing, views missing	(2) errors of the following: principle dimensions (whether tabulated or dimensioned) missing, views missing	(1) error of the following: principle dimension (whether tabulated or dimensioned) missing, view missing	All principal dimensions labeled and tabulated
	Construction	(3+) errors of the following: missing rudder dimensions (including pivot), bill-of-material incomplete, missing part numbers, missing necessary views/pieces	(2) errors of the following: missing rudder dimensions (including pivot), bill-of-material incomplete, missing part numbers, missing necessary views/pieces	(1) error of the following: missing rudder dimension (including pivot), bill-of-material incomplete, missing part number, missing necessary view/piece	Construction process clear and rudder dimensions (including pivot) included
	Nesting	(3+) errors of the following: pieces not accounted for, pieces not numbered, not laid out properly	(2) errors of the following: pieces not accounted for, pieces not numbered, not laid out properly	(1) error of the following: a piece not accounted for, a piece not numbered, not laid out properly	All pieces accounted for, numbered, and laid out properly
	Loading	(3+) errors of the following: views missing, components missing, labels missing, locating dimensions/wording missing (when appropriate), loading condition does not match calculations, tabulated principle dimension missing	(2) errors of the following: views missing, components missing, labels missing, locating dimensions/wording missing (when appropriate), loading condition does not match calculations, tabulated principle dimension missing	(1) error of the following: view missing, component missing, label missing, locating dimension/wording missing (when appropriate), loading condition does not match calculations, tabulated principle dimension missing	All components shown, labeled, and located (when appropriate) in all required views; loading condition matches the calculations, principle dimensions tabulated

DRAWING SET					
JUDGING CRITERIA		**Poor** (0 pts)	**Fair** (3 pts)	**Good** (6 pts)	**Excellent** (9 pts)
EFFICIENT CONSTRUCTION	**Access**	Boat cannot be easily produced	Boat has many (3-4) tight/restricted areas	Boat has few (1-2) tight/restricted areas	Boat can be easily produced considering the design
		Boat has watertight compartments	N/A		Boat does not have watertight compartments
	Dimensions	Many (10+) of dimensions are not in fractions of an inch	Some (4-9) dimensions are not in fractions of an inch	Few (1-3) dimensions are not in fractions of an inch	All dimensions are in fractions of an inch (where achievable)
		Many (5+) calculations are needed to find remaining dimensions; dimensions are not present	Some (3-4) calculations are needed to find remaining dimensions	Few (1-2) calculations are needed to find remaining dimensions	All dimensions needed for construction are present/no need to request additional dimensions
	Piece Parts	Many (5+) piece parts are used	Some (3-4) piece parts are used	Few (1-2) piece parts are used	Boat only has piece parts where needed
	Waste (dependent on required buoyancy and team's desire to maximize payload)	Complete disregard to utilizing space for payload/components	Disregard to utilizing space for payload/components	Little wasted space in boat for payload/ components	Most efficient use of space in boat for payload/components
	Steering Assembly	Assembly requires disassembly to fit	N/A		Assembly easily fits without disassembly
	Propulsion Motor	Motor requires disassembly to fit	N/A		Motor fits easily without disassembly
	Bends/Breaks	Design has no bends/breaks and could have utilized them	Design requires mostly welded seams, but could have utilized more bends/breaks	Design shows attempt at incorporating mostly bends/breaks where possible	Design utilizes bends/breaks wherever possible

DRAWING SET					
JUDGING CRITERIA		**Poor** (0 pts)	**Fair** (3 pts)	**Good** (6 pts)	**Excellent** (9 pts)
EFFECTIVE CONSTRUCTION	**Reasonable**	Boat is longer than 12’	N/A		Length overall ≤ 12’
		Boat is wider than 50”	N/A		Beam ≤ 50”
		Structure/appendages/ hulls (catamarans/ trimarans) poorly supported	Structure/appendages/ hulls (catamarans/ trimarans) simply supported	Structure/appendages/ hulls (catamarans/ trimarans) conservatively supported	Structure/appendages/ hulls (catamarans/ trimarans) adequately supported
		Payloads/components not supported/secured (4+)	Some (2-3) payloads/components secured	Few (1) payloads/components not secured	All payloads/components secured
	Achievable	Construction is not possible based on drawings; many (4+) modifications are necessary	Construction is difficult; some (2-3) modifications are necessary	Construction can be accomplished with only minor/few (1) modifications	Construction can be accomplished with no modifications
		Boat uses complex curvature	N/A		Boat does not use complex curvature
	Steering Assembly	Assembly mounting holes not provided; mount not sturdy	N/A		Assembly mounting holes provided; mount sturdy
		Assembly not located at least 6” above *load* waterline	N/A		Assembly located at least 6” above *load* waterline
	Propulsion Motor	Motor mount not provided; mount not sturdy	N/A		Motor Mount provided (as required); mount sturdy
	Rudder	Rudder is several pieces; has contoured/beveled edges	N/A		Rudder is one piece; no contoured/beveled edges

CALCULATIONS PACKET					
	JUDGING CRITERIA	**Poor** (0 pts)	**Fair** (6 pts)	**Good** (12 pts)	**Excellent** (18 pts)
COMPLETENESS	**Completion**	Teams used outside methods to complete calculations	N/A		Teams used currently provided material to complete calculations
	Freeboard	Freeboard not met at any length of the boat/freeboard less than 4”	Freeboard met at one end of the boat/freeboard is at least 4”	Freeboard met at one end of the boat/freeboard is at least 5”	Minimum freeboard conditions met along the entire length of the boat
	Cleanliness	Many (5+) calculations cannot clearly be followed or read	Some (3-4) calculations are difficult to follow or read	Few (1-2) calculations are difficult to read or follow	Calculations are provided in order; easy to read and follow
	Weight & Center of Gravity	(3+) errors of the following: piece/part/component /payload missing, payload not separated as directed, does not match loading diagram	(2) errors of the following: piece/part/component /payload missing, payload not separated as directed, does not match loading diagram	(1) error of the following: piece/part/component /payload missing, payload not separated as directed, does not match loading diagram	Weight spreadsheet complete; payloads separated as directed; matches loading diagram
	Displacement & Draft	(3+) errors of the following: draft missing, spreadsheets missing information, missing calculations	(2) errors of the following: draft missing, spreadsheets missing information, missing calculations	(1) error of the following: draft missing, spreadsheets missing information, missing calculation	Both area spreadsheets complete; all calculations provided
	Buoyancy	(3+) errors of the following: spreadsheets missing information, missing calculations	(2) errors of the following: spreadsheets missing information, missing calculations	(1) error of the following: spreadsheets missing information, missing calculation	Both area spreadsheets complete; all calculations provided
	Stability	(3+) errors of the following: CAD displacement used, missing calculations	(2) errors of the following: CAD displacement used, missing calculations	(1) error of the following: CAD displacement used, missing calculation	All calculations are provided; CAD displacement not used
	Trim	Calculations are not provided	Some calculations are provided	Most calculations are provided	All calculations are provided

CALCULATIONS PACKET					
JUDGING CRITERIA		**Poor** (0 pts)	**Fair** (6 pts)	**Good** (12 pts)	**Excellent** (18 pts)
ACCURACY	**Weight & Center of Gravity**	Calculations are not accurate	Calculations are not accurate within 30-50%	Calculations are accurate within 10-20%	Calculations are accurate within 10%
	Displacement & Draft	No evidence of iterations	(2) errors of the following: too few areas taken for complexity of hull, last iteration not carried out to improve accuracy	(1) error of the following: too few areas taken for complexity of hull, last iteration not carried out to improve accuracy	Iterations carried out to accuracy; plentiful areas are taken; waterplane area matches the one on the table, displacements match
	Buoyancy	Calculations are not accurate	Calculations are not accurate within 30-50%	Calculations are accurate within 10-20%	Calculations are accurate within 10%
	Stability	Calculations are not accurate	Calculations are not accurate within 30-50%	Calculations are accurate within 10-20%	Calculations are accurate within 10%
	Trim	Calculations are not accurate	Calculations are not accurate within 30-50%; trim not reworked to minimize error	Calculations are accurate within 10-20%; trim not reworked to minimize error	Calculations are accurate within 10%; trim minimized to increase accuracy

DESIGN					
JUDGING CRITERIA		**Poor** (0 pts)	**Fair** (3 pts)	**Good** (6 pts)	**Excellent** (9 pts)
COMPLETENESS	**Creativity**	Design is unimaginative; replica of previous entry	Design simply fulfills requirements; copies previous entry	Design shows creative approach; inspired by previous entry	Design is unique, creative, inspired
PAYLOAD	**Arrangement**	Snaméballs are not carried in accordance with the Guidelines	N/A		Snaméballs are carried in accordance with the Guidelines

APPENDIX G: TEST PHASE JUDGING RUBRIC

JUDGING CRITERIA	2 Points	4 Points	6 Points	8 Points	10 Points
DRAFT & TRIM	The boat's actual waterline and trim were not close to the estimated waterline and trim.	The boat's actual waterline and trim were within 20-25 percent of the estimated waterline and trim.	The boat's actual waterline and trim were within 15-20 percent of the estimated waterline and trim.	The boat's actual waterline and trim were within 10-15 percent of the estimated waterline and trim.	The boat's actual waterline and trim were within 0-10 percent of the estimated waterline and trim.
STABILITY	The boat was not stable when placed in the water and loaded.	The boat was stable in the water, but the GM missed the calculated value by > 50%.	The boat was stable in the water, and the GM missed the calculated value by between 25% and 50%.	The boat was stable in the water, and the GM missed the calculated value by between 10% and 25%.	The boat was stable in the water, and the GM missed the calculated value by less than 10%.
WEIGHTS	Weight calculations were accurate within 25%	Weight calculations were accurate within 20%	Weight calculations were accurate within 15%	Weight calculations were accurate within 10%	Weight calculations were accurate within less than 5%
CENTER OF GRAVITY	Center of gravity calculations were accurate within 25%	Center of gravity calculations were accurate within 20%	Center of gravity calculations were accurate within 15%	Center of gravity calculations were accurate within 10%	Center of gravity calculations were accurate within less than 5%
PENALTY*	20 points for hull modifications 5 points for adding/subtracting/relocating payload/ballast as illustrated by the Loading Diagram				
RACES	**POSITION**	**1st Place = 20 pts, 2nd Place = 15 pts, 3rd Place = 10 pts, 4th Place = 5 pts**			
	PENALTY	Snamémon are our friends. Hitting a Snamémon [or any buoy/inflatable] results in a 30 second penalty.			
	BONUS	1/20 (1/10) of a second deducted for each Snaméball transported for the High Speed (Scenario) race.			

*Criteria and point breakdown subject to change on Race Day. Awardable multiple times.

GLOSSARY

The illustrated glossary can be downloaded from:

https://communities.sname.org/designcompetition/glossary