A Materials Technology Institute Publication

MTI CONNECT

2021, ISSUE 2

GLOBAL CHALLENGES / TRUSTED SOLUTIONS

Sulfide Stress Cracking of a Pipe in a Sour Gas Processing Plant

Page 8

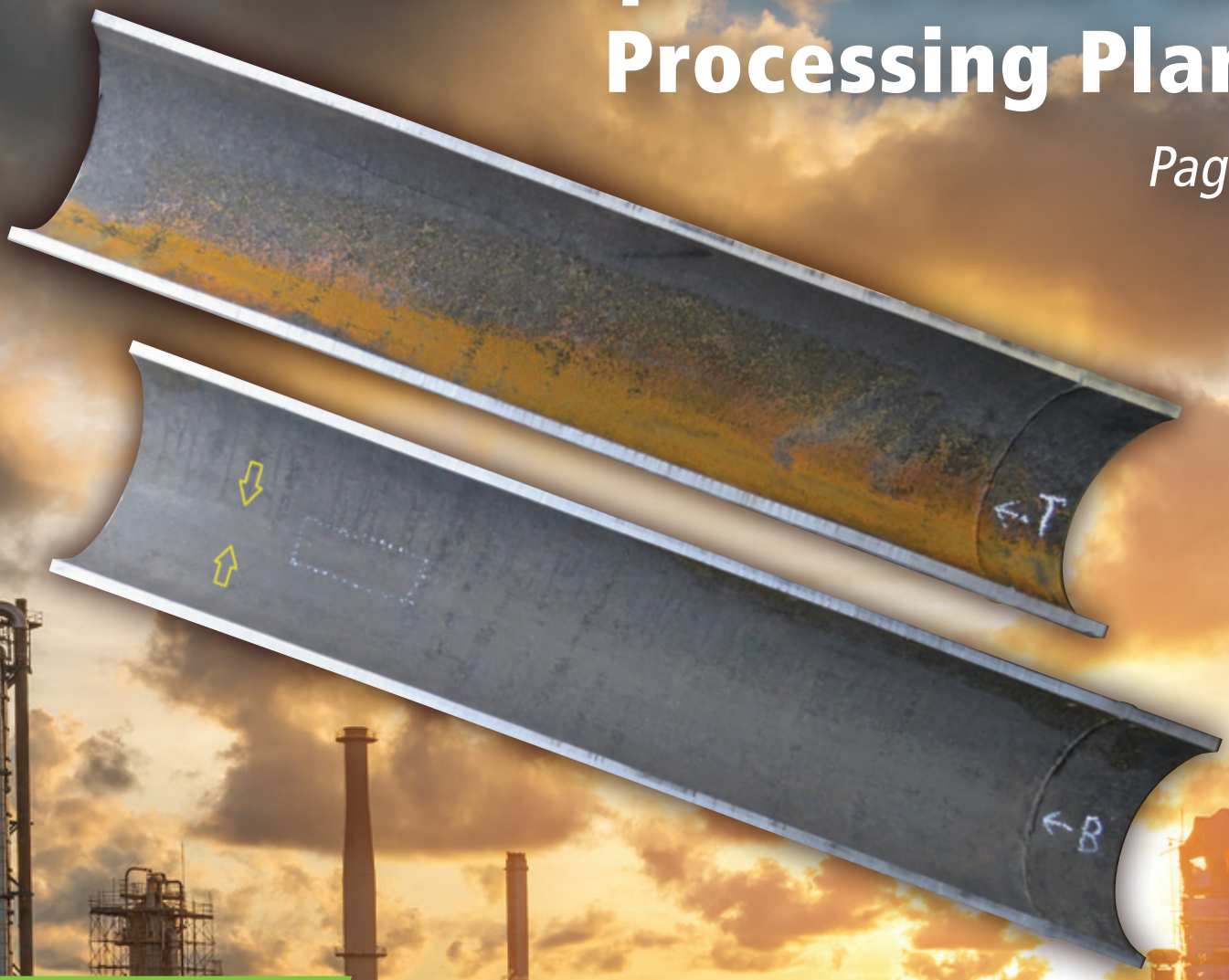

MTI-GLOBAL.ORG

CONNECT

Inside This Issue

ABOUT THIS PUBLICATION:

MTI CONNECT is published by the Materials Technology Institute, Inc. (MTI). MTI is a unique, cooperative research and development organization representing private industry. Its objective is to conduct generic, non-proprietary studies of a practical nature on the selection, design, fabrication, testing, inspection, and performance of materials and equipment used in the process industries.

The contents of articles and any opinions expressed therein are those of the authors and do not represent those of MTI. Any products and/or services advertised in this publication carry no real or implied endorsement or recommendation by MTI.

CONTACT:

Submit all correspondence regarding MTI CONNECT to:
Materials Technology Institute, Inc.
1001 Craig Road, Suite 490
St. Louis, MO 63146
1-314-567-4111 (telephone)
mtiadmin@mti-global.org

MTI CONNECT EDITORIAL BOARD:

SUBSCRIPTIONS:

For a free subscription, write to MTI or contact ***mtiadmin@mti-global.org***

WEBSITE:

http://www.mti-global.org

Please contact us at 1-314-567-4111 or mtiadmin@mti-global.org for more information or to find out how your company can become a member.

CALENDAR OF EVENTS:

EuroTAC Fall Meeting
October 12-14, 2021
Villepinte, France

AmeriTAC 136 & Ceramics Training
October 23-25, 2021
Atlanta, GA

Dual Laminate Training
November 9-10, 2021
Baton Rouge, LA

Global Solutions Symposium
March 1-3, 2022
Orlando, FL

Left: David Barber (Dow), MTI BOD Chair, presents former MTI member Steve Springer with MTI's 18th Fellow Award on June 23, 2021, at the AmeriTAC 135 meeting in Louisville, KY. The Fellow designation is the highest honor awarded at MTI.

STEVE SPRINGER NAMED MTI FELLOW

FORMER DUPONT TAC REP AND BOARD MEMBER HONORED AT AMERITAC 135

MTI's TAC Meetings around the world have often felt like reunions, bringing colleagues together who haven't seen one another for many months. The vibe at the June 2021 AmeriTAC Meeting was special in that regard since the North American members hadn't met in person for more than a year. Among those attending was longtime member Steve Springer, who had taken a short hiatus from MTI after retiring from Chemours in 2018. Springer, who spent the great majority of his career with DuPont, was on hand to accept the organization's highest honor. He was named MTI's 18th Fellow.

After earning a bachelor's degree in Metallurgy (Lehigh) and a master's in Materials Science (Duke), Springer went to work for DuPont in 1977. He began attending TAC Meetings in the late 1980s. "What I remember is my fondness for that because I had been to NACE meetings, and they were fine, but NACE just didn't scratch my itch for getting a handle on good practical knowledge that I could immediately take and use," he recalls. "When I went to MTI, I realized that here were well qualified people that had been down the road that I was going down and had great advice, things to remember, techniques to use, comments about vendors, and the whole works. I thought this organization can really help me!"

He quickly learned that getting involved in projects would not only benefit his company but help him grow as a professional. Thirty-plus years later, Springer has participated in so many MTI studies that it's hard to remember them all. "I love the projects that MTI is doing, no doubt about it," he shares. "A lot of them were collecting a lot of information and putting it in a publication. I got in that 'parade' because that was the kind of stuff I was looking for. But I found that as I advanced in my career, the stuff that I really liked was when MTI got into the metallurgy and the materials science of it. They got into projects that were tough to do but were rewarding because it hadn't been done before. For example, even though I wasn't on the Project Team, I really loved the whole thing around getting higher allowable stresses for some of those titanium alloys into the code. I could really see where we influenced the

> CONTINUED ON PAGE 24

Refractory Ceramics Fiber Training

October 25, 2021 — Atlanta, GA

The Refractory Ceramics Fiber (RCF) Training is scheduled October 25, 2021, in Atlanta, GA. It will be held in conjunction with AmeriTAC 136 in downtown Atlanta at the Marriott Marquis hotel. The Ceramics PDC (Project Development Committee) has sponsored several general refractories training programs in past years and is ready to begin offering specific areas of ceramic technology training. A recent need for more information specific to refractory ceramic fiber was identified by a member company and presented itself as an excellent opportunity for this program.

Co-Championed by Jay Schickling (Chemours) and Marc Cook (Dow), the project will focus on providing attendees a full day training opportunity to learn about RCF materials. The project will utilize a similar methodology as prior ceramics training programs, soliciting experts from the refractory ceramic fiber industry as volunteer presenters to share their knowledge. The presentations will be compiled to be shared with members on the MTI website and may be used to develop a refractory ceramic fiber handbook.

The course outline and other details are being finalized, but participants can expect to cover a wide range of topics, including:

- Refractory Ceramic Fiber Fundamentals
- Pros and cons of different types of RCF modules
- RCF Design Guidelines
- Installation
- Advanced RCF Fundamentals
- Health and safety considerations for use and handling of RCF
- Inspection and maintenance of aging linings
- Product demonstrations

This training will utilize experts from within MTI and from the RCF Industry, including Thermal Ceramics and HarbissonWalker International Refractory Products, to present state of the art information on RCF. It will be a "deep dive" on this topic, equipping the participants with the knowledge to more effectively manage RCF at their facilities.

Registration is expected to be available in early to mid-September. Additional information and registration will be announced at www.mti-global.org. Please check there for updates regarding this event.

Photos courtesy of Morgan Advanced Materials Thermal Ceramics.

NEW TRAINING COURSES THIS FALL

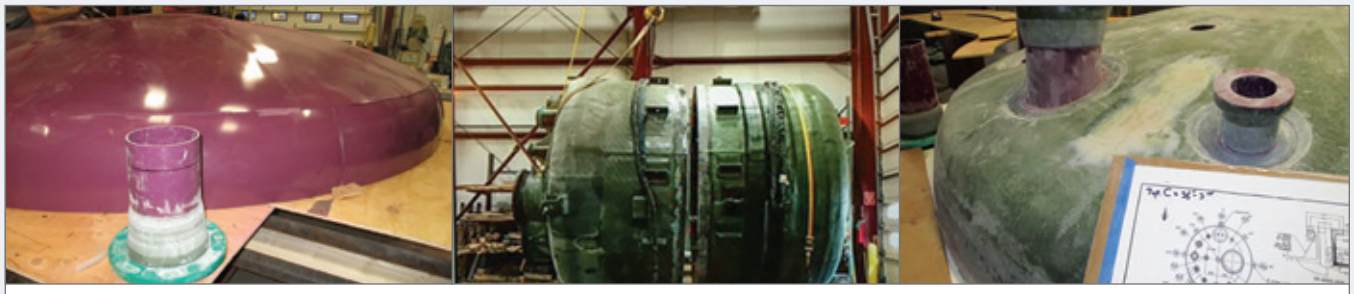

Dual Laminate Training

November 9-10, 2021 — Baton Rouge, LA

Originally scheduled in May, the in-person Dual Laminate training was pushed back to November 9-10, 2021, due to ongoing circumstances surrounding COVID-19. The training location remains unchanged; participants can make hotel reservations at the Embassy Suites in Baton Rouge.

The two-day session will cover a wide range of valuable information, including dual laminate materials and design fundamentals, manufacturing techniques for pipe and equipment, applicable codes and testing, fabricator qualification, installation, inspection, repair options as well as a review of case histories.

The project champions – Deb McCauley (Chemours) and Dale Keeler (Retired from Dow) – said they know of no formal training available in industry that covers this range of dual laminate topics. In addition, the course will be taught by instructors who have successfully completed numerous dual laminate projects and learned important lessons from a few mistakes along the way. The team hopes to supply attendees with a wealth of knowledge and instruction from experts who have more than 150 years of combined experience.

"The goal is to provide lessons learned to short-cut member companies' learning curve," explains Keeler. "Nowhere is there training of the whole enchilada. There will also be a 'show and tell' aspect to this. This is where many questions are answered, and attendees get to touch and feel what is being discussed."

Registration, hotel reservations and additional information is available online at www.mti-global.org. Members and non-members are encouraged to sign-up for this one-of-a-kind opportunity. The course capacity is set at 60 attendees and it's beginning to fill up!

COURSE OUTLINE

1. Overview
2. MOC / Materials Selection
3. Design of Vessels, Piping and Flanges
4. Fabrication of Dual Laminate Vessels
5. Fabrication of Dual Laminate Piping
6. Welding / Joining
7. Installation
8. Qualifying a Dual Laminate Fabricator
9. Testing Techniques and Tools
10. Inspection of New Equipment
11. Evaluation of In-Service Equipment
12. Repair / Alteration
13. Case Histories
14. Summary / Evaluation Test

COURSE DETAILS

Members: $100 **Non-Members:** $1,000
Location: Embassy Suites Hotel – Baton Rouge, LA
Room Rate: $119 / night
Contact: mtiadmin@mti-global.org
+1 314-567-4111

MISTRAS GROUP, ASSET PROTECTION INDUSTRY LEADER, JOINS MTI

SEEKS TO ENHANCE EXPERTISE THROUGH MEMBERSHIP

MISTRAS Group is the latest addition to Materials Technology Institute (MTI). MISTRAS Group is a leading "one source" multinational provider of integrated technology-enabled asset protection solutions, helping to maximize the safety and operational uptime for civilization's most critical industrial and civil assets. Founded in 1978 and headquartered in Princeton Junction, New Jersey, MISTRAS serves customers around the world with over 100 field services branches and laboratory testing locations across North America, Europe, and South America.

The company has grown into an industry leader on the strength of its non-destructive testing (NDT) portfolio, with a robust suite of available advanced and traditional NDT solutions. MISTRAS enhances value for its clients in the oil & gas, process, and other industries by integrating asset protection throughout supply chains and centralizing integrity data through a suite of Industrial IoT-connected digital software and monitoring solutions. The company's core capabilities include field NDT and in-line inspections enhanced by advanced robotics, laboratory quality control and assurance testing, sensing technologies and NDT equipment, asset and mechanical integrity engineering services, and light mechanical maintenance and access services.

MISTRAS has a long history of partnership with many companies who are also MTI members, who have relied on MISTRAS' expertise and innovative research and development to solve their most difficult asset protection challenges. Many of the company's leading Acoustic Emission (AE) and Ultrasonic (UT) solutions were developed in collaboration with process industry owners and operators. Recently, the company introduced an Automated Radiography (ART) solution to detect corrosion under insulation (CUI) and localized corrosion in piping that was initially commissioned by a major oil & gas owner-operator.

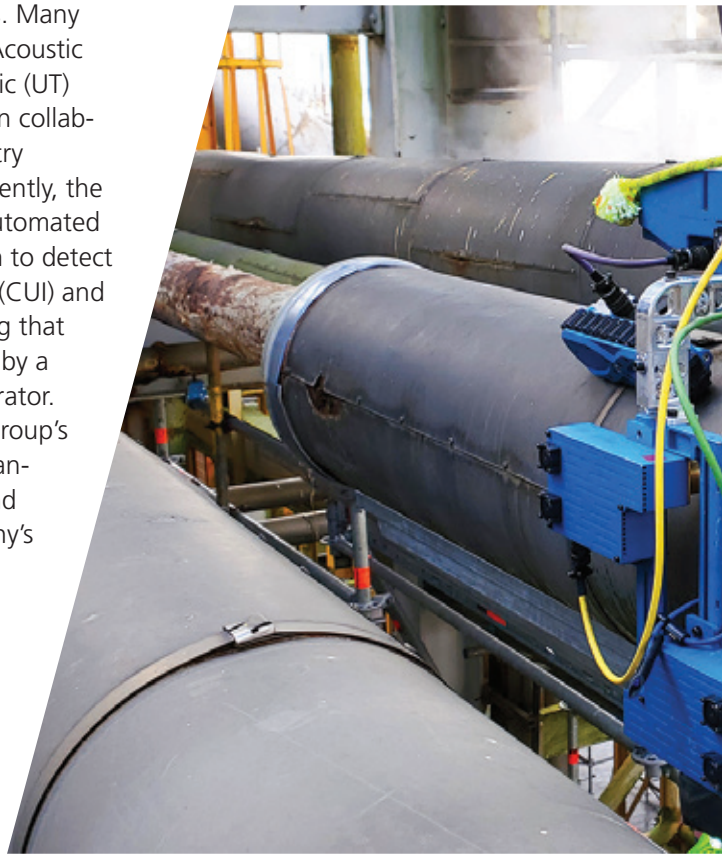

Jim McVay—MISTRAS Group's Principal Advisor for Mechanical Integrity, Metallurgy and Corrosion, and the company's Designated Representative for MTI—said that the opportunity for additional collaboration with other MTI members is one of the reasons MISTRAS sought to join MTI.

"MISTRAS exists to help our clients operate more safely and effectively," said McVay. "Our customers rely on us to find innovative solutions to their asset protection issues, and we are constantly seeking out ways to enhance and find new applications for our advanced inspection technologies and engineering services."

McVay leads a team of MISTRAS engineering consultants that provides engineering and mechanical integrity (MI) consultation services to help process facilities optimize facility design and operations. To support these functions, MISTRAS offers corrosion and materials engineering support; inspection plan development and project engineering for facilities, assets, and turnarounds; mechanical integrity audit support services; and client-reactive support to consult on the root causes of identified issues and offer guidance on mitigation and repair action plans.

As an example of the type of materials engineering and selection support that MISTRAS provides its clients, MISTRAS recently worked with a client to inspect a steam methane reformer prior to restarting. After another company completed the inspections based on a damage mechanism review (DMR), the client submitted the report to MISTRAS for evaluation. MISTRAS' engineering consultants determined the scope

MISTRAS

LEFT: MISTRAS is an industry leader in non-destructive testing (NDT) inspection technology innovation, including this automated radiography testing (ART) crawler for the detection of corrosion under insulation (CUI) and localized corrosion in piping. RIGHT: MISTRAS provides extensive engineering expertise and advanced inspection technologies for the detection and mitigation of a wide range of damage mechanisms in the refining and process industries, including corrosion, cracking, leaking, and more.

of the inspection needed to be expanded and supplied technicians to conduct a specific inspection technique – Phased Array (PAUT) and Total Focus Method (TFM).

Following the inspection and expert metallurgical consultation from MISTRAS, it was discovered that one vessel and two heat exchanger channels needed to be replaced due to severe High Temperature Hydrogen Attack (HTHA) damage, all of which were originally inspected and cleared by the initial third-party evaluation and inspection. The connecting piping between these vessels was also carbon steel and also had to be replaced. In total, MISTRAS' intervention generated cost savings of nearly three million dollars for the client.

"It's crucial for reliable and safe plant operation that process facilities get inspection, corrosion, and materials experts involved early, because not finding these issues prior to start-up could have resulted in significant financial, operational, and safety issues," McVay notes. "Through our membership with MTI, we hope to support our fellow members to avoid these potential downfalls through our engineering expertise and advanced inspection technologies."

Case studies like this one underscore the importance for process facilities to work with experts to support their mechanical integrity, metallurgy, and corrosion mitigation initiatives. Through collaboration with other MTI members, MISTRAS is looking forward to using its asset and mechanical integrity engineering consulting solutions, inspection expertise, and world-class R&D to help organizations in the oil & gas and process industries drive asset performance through asset protection. ▪

THE ROLES OF LOCAL HARD ZONES & MATERIAL INCLUSIONS

On the Sulfide Stress Cracking of a Pipe in a Sour Gas Processing Plant

IBRAHIM M. GADALA, PH.D., P.ENG., RESEARCH ENGINEER, NOVA CHEMICALS CORPORATION

1. Introduction

Sulfide Stress Cracking (SSC) from wet H_2S damage is an established degradation mechanism with well-documented failure case histories [1]. In this article, an unconventional failure case where SSC was a main culprit is discussed. A leak on a NPS 12" pipe carrying sour natural gas was discovered by a major oil and gas producer. Further investigation found the specific leak source at the six o'clock location (Figure 1). The submitted failed pipe cut-out was 1.5 meters (m) and contained a girth weld approximately 1 m upstream of the cracked location as-received (Figure 1). Notably, the sample had a wall thickness larger than the standard (i.e., Schedule 40) for NPS 12 pipe. This article summarizes the scope, methods, results, and interesting findings from the failure analysis conducted.

2. Scope

The scope of work followed these steps: (1) visual examinations, (2) analysis of chemical composition of scale, (3) microhardness measurements, (4) fractography, and (5) microscopic examinations. In this article, only select results are presented, but discussions and conclusions are based on findings from all experimental methods.

3. Results and Discussion

Material evidence found in this analysis indicated that the failure occurred due to SSC initiating from the external surface (outer diameter, OD) and then propagating towards the internal surface (inner diameter, ID) until a through wall crack had formed resulting in the leak of internal media.

3.1 SSC

SSC is defined as cracking of a susceptible material under the combined action of tensile stress and corrosion in the presence of water and H_2S [2]. Carbon steel is a susceptible material and all three primary components necessary for SSC to occur are present here:

- H_2S: present in significant amounts (~40%) in gaseous internal media. Only a partial pressure of H_2S >0.0003 MPa (0.05 psia) in the gas phase is enough for SSC to occur [2].
- Water: evidence showing staining of bottom surface where cracking was found supports the presence of an aqueous phase which previously pooled there (Figure 2). This is likely due to condensation of gas-phase moisture in the line, as circumferential streaking was found from the top to pooling stains.
- Tensile stress: the normal operating pressure of the line creates a hoop stress which can initiate and sustain cracking in the longitudinal direction perpendicular to the stress. Additionally, non-uniform residual stress due to pipe manufacturing are present as evidenced by the hardness measurements (Table 2 and Schematic 1).

> CONTINUED ON PAGE 10

Figure 1

Overview of cut-out sample seen from bottom showing location where cracks and leak were identified.

Figure 2

Overview of sample's ID after splitting. Evidence of previous pooling on bottom corresponding to where cracking was observed externally marked with dotted white square. Cracks observed on ID were within this area.

Table 1

Formula	Compound Name	ID Scale from Bottom Surface
FeS_2	Pyrite	38.0
FeS_2	Marcasite	19.7
Fe_3O_4	Magnetite	11.8
Fe_2O_3	Hematite	10.2
FeO	Wustite	6.0
FeS	Mackinawite	2.5
$Fe_{0.714}S$	Troilite	2.1
Fe_3S_4	Greigite	1.5
S	Sulphur	0.9
Mn_3O_4	Manganese Oxide	0.8
SiO_2	Quartz	0.7

Quantitative XRD results of removed scale: all compounds, weight%

Table 2

Location	Hardness, HRB(W)	Approximate HV Equivalent [3]
ID	76 ± 1	139
OD	84 ± 1	162

HRB(W) macrohardness results & conversions to HV as per [3]

Schematic 1

Location	Hardness, HV	Location	Hardness, HV
1 (OD and FF)	181	7 (Mid-wall_a)	145
2 (Mid-FF)	141	8 (Mid-wall_b)	135
3 (ID and FF)	145	9 (Mid-wall_c)	143
4 (OD_a)	178	10 (ID_a)	138
5 (OD_b)	176	11 (ID_b)	141
6 (OD_c)	179	12 (ID_c)	143

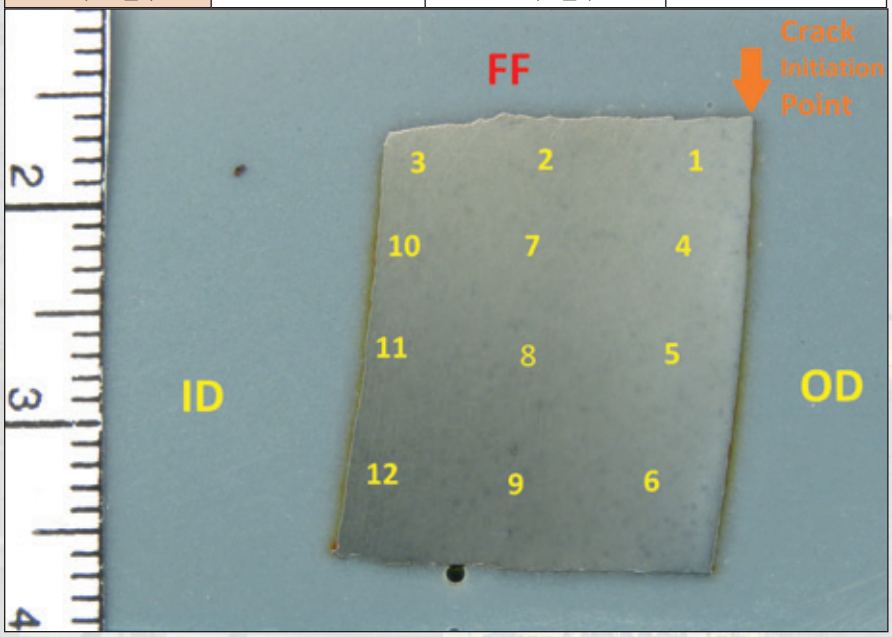

Vickers micro hardness distribution (HV_{500g}). Ff: fracture face.

3.2 Sequence of Events

The evidence found in the analysis suggests that the following sequence events most likely occurred:

- H_2S corrosion occurred on the bottom internal surfaces of the sample where a water phase was present. This resulted in a well-adhered black sulfide surface scale. Dissolved H_2S dissociates into protons (H^+) and sulfide (S^{2-}). The main two electrochemical reactions of H_2S corrosion are the anodic Fe dissolution from the steel into ferrous (Fe^{2+}) and the cathodic reduction of ionic hydrogen in the aqueous phase into atomic hydrogen (H). The chemical association of Fe^{2+} and S^{2-} forms the black FeS-rich scale found on the ID (Table 1).
- H formed on the ID surface during (i) permeate through the scale and into the steel. It is noted that:
  - Condensed water from moisture in the gas phase does not contain the buffering capability of produced water due to the absence of bi/carbonate ions, hence the pH of the water phase previously pooled at the bottom of the pipe is expected to be quite low.
  - At lower pH, hydrogen evolution by the reduction of H^+ is dominant (over water reduction) due to the high concentration of H^+.
  - H_2S is a poison for the hydrogen recombination reaction, which would normally result in the formation and off-gassing of diatomic hydrogen ($H_{2(g)}$).
  - Elevated temperatures promote the dissociation of H_2S and increase the diffusion rate of H in metals. Therefore, H ingress to the steel was relatively easy at the 70°C operating

Figure 3

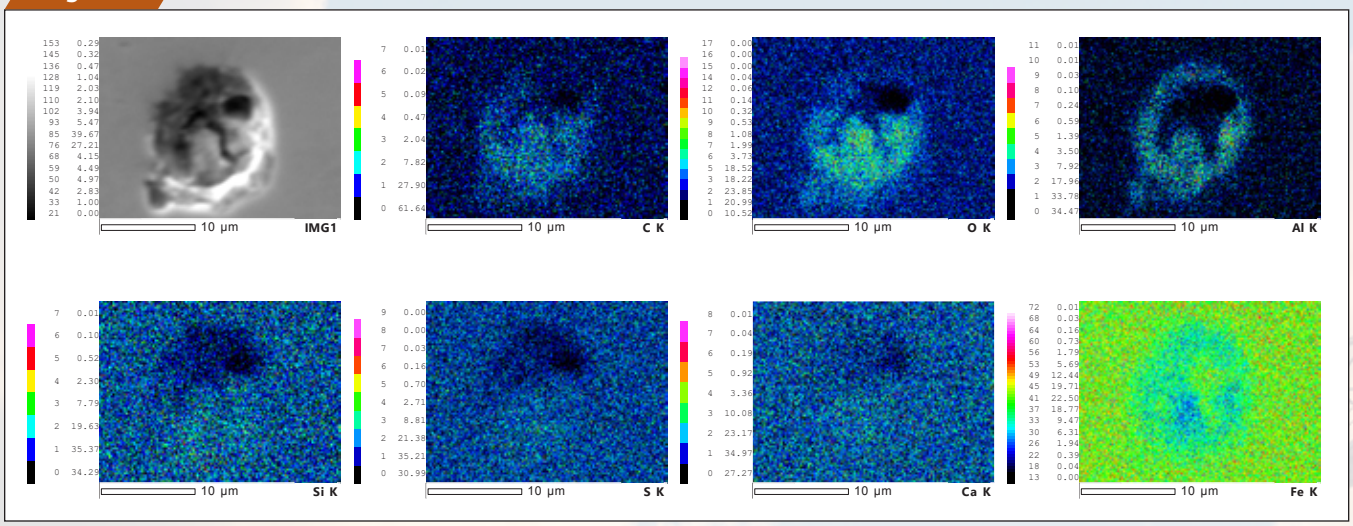

EDS map of spatial distribution of C, O, Al, Si, S, Ca, and Fe at inclusion.

temperature. However, the SSC cracking potential is maximized at near-ambient temperature. This distinction is important because the steel may have been charged during operating temperature and subsequently cracked during excursions to lower temperatures (e.g., shutdowns).

- With time, subsurface H diffused to the OD surface. During this process, some atoms are trapped at inclusions and dislocations in the material.
- SSC initiated on the OD surface at multiple locations at similar times. SSC is possible in base metals with localized hardness points. It is expected that hardness points >200 HB will eventually crack as per [4], especially if localized hardness exceeds 237 HB [2]. It is noted that:
  - Threshold hardness in standards (e.g., maximum 22 HRC [5]) do not indicate immunity of materials to SSC below them. Rather, they indicate low susceptibility, but the material may still experience SSC with the confluence of other factors.
  - Some carbon steels contain residual elements that form high hardness areas that will not temper at normal stress relieving temperatures.
  - The microstructures examined from this sample showed evidence of spherical holes and inclusions rich in aluminum (Al), calcium (Ca), and silicon (Si) (Figure 3). Ca concentrations are not specified in ASTM A106 Grade B.

> CONTINUED ON PAGE 17

Figure 4

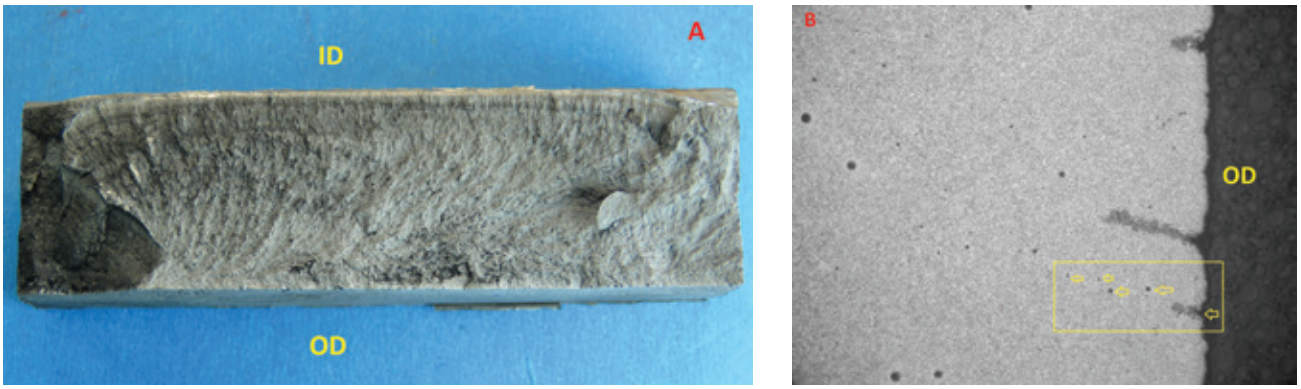

(A) View of through-wall crack portion of ff; striations near the id are evidence of crack propagation from the od towards the id; (B) detailed cross-section showing cracks initiating from od and propagating in the path with inclusions—mag. 50x.

MTI SYMPOSIUM 2022 KNOWLEDGE MANAGEMENT KEYNOTE ANNOUNCED

Todd Hudson

FOCUS ON CREATING SME KNOWLEDGE MANAGEMENT PLANS

The MTI Symposium Committee is excited to announce the Knowledge Management Keynote slated for March 3, 2022, "Eliminate, Automate or Transfer? Create SME (Subject Matter Expert) Knowledge Management Plans that Add Real Business Value." Todd Hudson of the Maverick Institute will give the keynote address.

Comments from the 2020 Symposium related to the Knowledge Management track involved questions on setting up a knowledge management plan; some members had a plan, but the majority did not. MTI knows that Human Resources is asking SME's to write training modules for their jobs and that they are treading water looking for a solution. Hudson plans to address these issues and questions in both his keynote and follow-up workshop later that day.

According to Hudson, the common thinking is that a SME's knowledge must be transferred to another person to continue being valuable. But, concepts like Lean and new technologies like artificial intelligence give organizations two additional powerful options to pursue. The keynote will present an overview of these alternatives, their pros and cons, and how to determine the best path to pursue.

Following the general session, Hudson will conduct a workshop where participants will have a hands-on opportunity to more fully understand and even start to create a knowledge management plan that helps them determine which knowledge to eliminate, automate or transfer. Time will be allocated (most to least) in this order: transfer, eliminate, then automate.

In addition to the Knowledge Management track, the Symposium will feature four technical tracks, including Emerging Technology, High Temperature Damage Mechanisms, Sustainability in the Processing Industry, and Safety/Maintenance. Attendees will be ready for an evening of fun at the Casino Night event on March 2, after a full day of educational sessions. Attendees will have the opportunity to play games, enjoy food and drinks, and spend the evening networking with exhibitors and fellow attendees all in the Global Solutions Marketplace.

The schedule of events is not complete; however, the committee is actively organizing the agenda and finalizing details. Announcements will be released via email and on the dedicated Symposium site www.mtiglobal.org/mtisymposium/about in late October/early November. Follow our social channels #mtisymposium2022 and watch for details about the schedule, registration, hotel and additional Symposium information. We look forward to welcoming you March 1-3, 2022, in Orlando!

P.S. Don't miss out on the Global Solutions Marketplace exhibit hall! See facing page for details ▪

CALL FOR EXHIBITORS

EXHIBIT HALL DETAILS

- 13 exhibition hours, plus the opportunity for 3 extra hours during our Casino Night event
- One (1) complimentary event registration per booth
- 6 ft. table, 2 chairs, trash can, power and cords
- Company logo and contact information on the event app, website and meeting materials
- Only tabletop displays will be allowed in the exhibit hall. All displays must fit on top of your table—no crates, pallets or free-standing displays
- Tabletop dimensions: 30″ x 72″
- Exhibit space is limited—first come first served

EXHIBIT BOOTH RATES

MTI Members $3,000
Non-Members $4,000

EXHIBIT HALL SCHEDULE*

Tuesday, March 1, 2022
- 2:00 – 4:00 pm Exhibitor Set Up
- 4:00 – 6:30 pm Welcome Reception/Exhibit Hall

Wednesday, March 2, 2022
- 7:00 – 8:30 am Breakfast/Exhibit Hall
- 9:30 – 10:00 am Break/Exhibit Hall
- 12:00 – 1:30 pm Lunch/Exhibit Hall
- 2:30 – 3:30 pm Break/Exhibit Hall
- 4:30 – 7:00 pm Reception/Exhibit Hall
- 7:00 – 10:00 pm Casino Night in Exhibit Hall (Booths may remain open)

Thursday, March 3, 2022
- 7:00 – 8:30 am Breakfast/Exhibit Hall
- 9:30 – 10:00 am Break/Exhibit Hall
- 12:00 – 1:30 pm Lunch/Exhibit Hall
- 2:30 – 3:30 pm Break/Exhibit Hall
- 4:00 pm Exhibitor Tear Down

*Subject to change

Contact Kirk Richardson to reserve your booth while space is available!

krichardson@mti-global.org
+1 314.567.4111

Q&A

WITH MAURICE WADLEY

PROJECT CHAMPIONS

MTI is at the forefront of providing global leadership in materials technology to improve safety, reliability, sustainability and profitability. Technical research projects play a vital part in the success of the MTI mission. While the goal and outcome of each project varies, the overarching commonality is member leadership to develop and nurture each project from inception to completion. These member leaders, dubbed MTI Project Champions, have the unique opportunity to grow leadership skills, network and create tangible solutions alongside other industry professionals.

In this issue, CONNECT spoke with Maurice Wadley (DuPont) to learn more about him and his leadership experience of potential project 351 – PTFE Bellows Expansion Joints Integrity.

Q: ***Please describe your role at DuPont.***

A: Materials Engineering Consultant for 10 years in non-metallic equipment materials specification, selection, and inspection.

Q: ***How long have you personally been a member of MTI and how have you benefited from your involvement?***

A: I have been a member of MTI since I joined DuPont in 2012, but I have been more involved in the last two years. My involvement has helped in generating useful training and documents to diagnose and prevent issues at our facilities.

Q: ***How have your fellow MTI members helped you grow in your career and in your involvement with MTI?***

A: In my involvement with MTI, I have learned immensely from the experience of other engineers at different companies just from attending sessions and being involved in projects.

Q: ***How did you become a project champion? Perhaps you were you eager to volunteer or other members encouraged you? Please tell us how you came to take on this role and what skills and/or experience you believe help you succeed in this role.***

A: I became a project champion after coming to the realization that to have a larger impact in my organization, I would need to lead a project. Very close to this, I attended an MTI AmeriTAC meeting and had an unrelated conversation with a former colleague, which reinforced the idea of making a larger impact and convinced me that the time was ripe for leading a project.

Q: ***Similarly, explain what you have learned from your experiences as a team member of other MTI projects and how that has helped you as a first-time project champion.***

A: Some of the things that I have learned from other projects, which I have found useful, are the need to hold regular meetings, the need to keep everyone up-to-date and informed about the project background at the AmeriTAC meetings, and never being afraid to ask for advice from anyone.

Q: ***Tell us about the project, PTFE Bellows Expansion Joints Integrity (351). What can we expect out of the final project deliverable?***

A: For most of the components in use in chemical plants, such as vessels, columns, piping, valves, seals, hoses, and expansion joints, there exist industry RAGAGEPs concerning life cycle and integrity issues. Of interest to MTI members are expansion joints, which often receive less attention than other components in piping systems. Expansion joints, also called compensators, normally compress rather than expand and provide the necessary stress relief from thermal and mechanical forces, such as movements and vibrations during normal operations. The most commonly used expansion joints are either elastomeric with wire or fabric reinforcements or made of polytetrafluoroethylene (PTFE), a commonly used fluoropolymer used for corrosion mitigation. Major chemical producers have banned the use of PTFE bellows in their plants due to poor reliability, inability to inspect, and numerous failures. Others use them when there is no other option available. However, the correct use of properly manufactured and designed bellows together with correctly qualifying fabricators/suppliers can provide significant advantages for plant design. Such bellows can even increase plant safety and reliability when isolating stress from sensitive equipment like graphite heat exchangers.

The overall goal of the project is to adapt recent work from Europe on qualifying PTFE bellows to properly identify the maximum pressure rating based on the internal pressure creep (IPC) test. Many manufacturers have different methods to arrive at their pressure ratings where the idea of material creep is rarely considered, and the IPC testing methodology is an attempt to arrive at the correct rating for PTFE bellows. Output from this project will include the test methodology, an awareness bulletin, and possibly a document of best practice related to the use and qualification of PTFE bellows.

Q: ***Why is this project important and how will it benefit all MTI members?***

A: This project is important as PTFE bellows are often used in hazardous services, which could lead to incidents. Properly designed and rated PTFE bellows would be beneficial to MTI members as it would enable safer plant operations.

Q: ***What do you hope to gain or what have you already gained from this experience as a project champion?***

A: Being a project champion has afforded me the experience of leading a project that has value for the MTI members with the visibility that it entails. Going through the process gave me a better understanding of how MTI operates and what I can bring to the table concerning my competency.

Q: ***Just for fun, so we get to know you outside of MTI: What is the best city you have ever visited and why?***

A: I really enjoy New York City due to the variety of quality food that can be obtained.

Q: ***Briefly talk about one exciting/proud moment in your professional career.***

A: I was quite proud to be involved in the design and fabrication of a piece of equipment made of Hastelloy with a PFA loose liner and silicon carbide insert for one of our plants. That combination of materials was quite unique and possibly the only one of its kind in the world. Unfortunately, it was never put into service as that portion of the plant was redesigned and it was no longer needed.

CONNECT thanks Maurice for taking the time to speak with us and for volunteering to champion a project. MTI members interested in learning more information about the project or joining the team can visit the PTFE Bellows Expansion Joints Integrity 351 community at www.mti-global.org/communities. ▪

FRACTURE TOUGHNESS AND WELDABILITY OF HIGH TEMPERATURE ALLOYS LITERATURE REVIEW RESULTS IN NEW POTENTIAL PROJECT

MTI PROJECT 356 RECAP

Industry Impact

Reformer furnaces are widely used in both the petroleum and chemical industries. Primary reformers are essential equipment in traditional ammonia and methanol plants. Reformer furnaces are also used to produce hydrogen in refineries. Reformer units need to operate reliably with constant conditions and planned shutdowns to keep plants online and running effectively. Unplanned shutdowns can often be caused by failures of components, such as headers in the outlet manifold system. Therefore, industrial users are interested in improved approaches for remaining-life predictions of the plant equipment made with high-temperature alloys.

Cast Alloy 20Cr32Ni1Nb is of particular interest for this project because it is common material of construction in this equipment. Specifically, there is a strong interest in using high-temperature and low-temperature fracture toughness testing to develop data needed for use in fitness-for-service (FFS) calculations for Steam Methane Reformer (SMR) outlet manifolds. A typical situation where the need for FFS calculations may arise is when inspection of an aged reformer manifold reveals indications of creep cracking, or other damage, and a remaining life estimate of the uninspected portions of the manifold is required to plan for repair or replacement of the equipment.

Objectives

There were two objectives for this project. One objective was to conduct a thorough literature review of existing technical data and methodology for the use of high-temperature fracture toughness testing options capable of generating the data needed for plant equipment FFS calculations and predictions of remaining life of reformer furnaces fabricated with the cast 20Cr32Ni1Nb alloy. The second objective was to develop an experimental test plan required to produce the type of data from cast alloy aged in process needed for FFS analysis.

Project Results

The initial concept for project 356 was to conduct an experimental lab study with the objective of developing data needed for FFS analyses of a reformer. However, during early discussions by the project team it became evident that there was not a clear understanding of any existing technical data or analysis methodology that would be useful for this kind of analysis. The project morphed into the objectives described above that was completed by the contractor. With completion of project 356, a general 'road map' now exists to conduct the experimental lab study originally envisioned by the team.

A new potential project #375 – "Remaining Life Evaluation of Aged Alloy 20Cr32Ni1Nb Components" was established by Co-champions Jeremy Nelson (Koch Industries) and Jose Ramirez (Air Products). The Strategic Project Summary objective is to perform mechanical property tests on 20Cr32Ni1Nb cast alloy samples harvested from an ex-service SMR outlet manifold. Evaluate applicability of mini-CT sampling technique to fracture toughness and weldability assessment (current outage) and prediction (future outage repair scope). Samples of plant-aged alloy components are available to use in this new potential project. ▪

Project Details

Co-Champions: Jeremy Nelson (Koch Industries) | Jose Ramirez (Air Products)
Contractor: Engineering Mechanics Corporation of Columbus
Funding: $20,000
Outcome: Final Report | New Potential Project Formed
Date Complete: March 2021

The Roles of Local Hard Zones & Material Inclusions

> CONTINUED FROM PAGE 11

- Based on the outer shell with inner core morphology of the inclusions and the presence of calcium and aluminum, it is probable that during the manufacturing process calcium was injected into the liquid steel to reduce sulphur levels to specification and change inclusion morphology and composition [6].
- Inclusions are typically less ductile than the surrounding matrix and therefore create localized triaxial stresses where crack initiation is more likely. Furthermore, inclusions and high-stress areas are locations where diffusing hydrogen is trapped, embrittling the material.
- The density of inclusions near the OD and FF of the failed metallographic cross-section was higher than the intact counterpart. Also, secondary cracks initiating on the OD of the former were seen aligning in the same direction of a string of inclusions (Figure 4b).
- The highest hardness was measured at the intersection of the OD and the FF. Also, the highest drop in hardness between the OD and the adjacent mid-wall was along the FF.

- Once the SSC initiated, the stress intensity factor of the sharp crack tips sustained slow propagation towards the ID. It is noted that:
  - H in steel reduces the threshold stress intensity factor (K_{th}). The following equation describes the dependence of K_{th} on H concentration [7]:

    $$K_{th} = \frac{1}{\beta'} exp\left[\frac{(k_{IG} - \alpha C_{H\sigma,T})}{\alpha'' \sigma_{YS}}\right]$$

    where α, α'', and β' are constants, k_{IG} is the intrinsic Griffith toughness for cleavage fracture without H, σ_{YS} is the yield strength of the material, and $C_{H\sigma,T}$ is the H concentration at the crack tip. $C_{H\sigma,T}$ depends on subsurface H concentration at the ingress side using [7]:

    $$C_{H\sigma,T} = C_s exp\left[\frac{\sigma_H V_H}{RT}\right]$$

    where σ_H is the crack-tip hydrostatic stress and VH is the molar volume of H in the steel.
  - Triaxial stresses at the crack tip are typically higher in thick-walled pipe versus thinner walled pipe due to the constraining effect of more surrounding material.
  - The cracks propagated together at different rates and coalesced where they became close to one another or overlapped. This indicates slow crack growth.
- Leaking to the outside occurred when one crack fully penetrated the wall thickness, corroding areas near the crack on the OD.

4. Summary

Material evidence found in the analysis this case indicates the failure of the pipe was primarily due to SSC initiating from the OD and then propagating towards the ID. The combination of higher hardness on the OD, the presence of inclusions and their higher concentration near the OD surface, and the presence of hydrogen in the susceptible steel material created a situation where SSC initiation was possible on the OD. Once the SSC initiated, the stress intensity factor of the sharp crack tip was enough to sustain slow propagation of the crack towards the ID, aided by the lower threshold stress intensity of the material due to hydrogen, high crack-tip stresses due to the constraining effect of the thick-walled pipe, and the existence of higher stress regions of harder inclusions along the crack direction where embrittlement is augmented by trapped hydrogen.

5. References

[1] R. Pourazizia, M. A. Mohtadi-Bonabb, J. A. Szpunara, Engineering Failure Analysis 109 (2020).

[2] API RP 571, 2nd Edition, 2011.

[3] ASTM E140, 1st Edition, 2005.

[4] NACE RP0472, 2005.

[5] ANSI/NACE MR0175/ISO 15156-2, 2015.

[6] W. Cubberly, Metals Handbook: 9th Edition, 1975.

[7] H. M. Ha, I. M. Gadala, A. Alfantazi, Electrochimica Acta 204 (2016). ▪

MTI NAMES 2021 SCHOLARSHIP RECIPIENTS

BY DANIEL RASMUSSEN

WILLIAM AND MURDOCH RECALL DEDICATION AND EXPERIENCES HELPED LEAD TO AWARD

Each year, the Materials Technology Institute offers two academic scholarships for students pursuing a career in the Process Industries, and each year it seems to become more challenging to select from the qualified applicants. MTI is pleased to announce that it has chosen two more outstanding students to award the 2021 Bert Krisher Memorial Scholarship. Camryn William, University of Alberta, and Owen Murdock, Ohio State University will each receive $5,000 toward academic expenses. Both students demonstrate a strong desire to enter the industry supported by academic achievements, work experience and enthusiasm for their chosen degrees.

Camryn William, University of Alberta

Camryn William's interest in Materials Engineering began her freshman year while attending presentations on each discipline at her university, and she became fascinated by the materials engineering presentation. She quickly learned that everything is made of a material – the foundation for everything we use, which sparked her interest in the field.

She then went on to work for a corrosion company, Corrpro, in Calgary, Alberta during the summer of 2019.

"My mentor [at Corrpro] was a Materials engineer and he instilled in me inspiration to work towards a career in materials engineering. He showed me that materials engineering can be just as versatile as other forms of engineering," William remarks.

Despite the tiring work of conducting corrosion tests on underground pipelines while walking 10 km a day during her 12-hour shifts, she continued to develop her passion for the industry.

The following summer she worked at Ram River Pipeline Outfitters, a company that specializes in Polyurethane Foam for pipeline and temperature insulation. While there,

Camryn William

she spent her time testing the compatibility of polyurethane foam and cathodic protection by running pre-qualification trials.

"These two are not supposed to work together," William explains. "But a test like this to check to see if there is a current on the pipeline has never been done before."

Currently, she works at AltaSteel in the quality analysis department. They produce 350,000 tons of steel per year where she works on improving the quality of this steel through measuring carbon segregation in steel samples and conducts trials with various materials to improve safety around the plant. Her current trial is testing Diatomaceous Earth to replace rice husk, which is expected to reduce the amount of eye injuries.

William has worked diligently in gaining field experience, but with graduation on the horizon in 2023, she would like to add another co-op to her resume. She is particularly hoping to find an opportunity in failure analysis. Her fascination of working backwards on a problem and finding the reasons it failed are what led her to actively search for a co-op in this area during the May – December 2022 work term.

Another co-op and time for additional activities might not have been possible without the MTI scholarship, she indicates; however, William says she now has time to work on EDI (equity, diversity, and inclusion) initiatives.

"The scholarship money allows me to shift my focus from financial burden to finding more ways of helping the community," she remarks.

"For example, the Association for Engineers in Alberta (APEGA) 30 by 30 initiative aims at raising the rate of female engineers in the industry to 30 percent by 2030."

She looks forward to having the ability to continue working with clubs and organizations to inspire young women about STEM.

Owen Murdoch,
Ohio State University

Owen Murdoch has known about his love of engineering for as long as he can remember, but did not know exactly what he wanted to do in the field until his sophomore year of high school. He knew that deciding on what college to attend and choosing his major at a young age could lead to financial burdens down the road.

"I had no intention of falling into that 'trap' and decided I should first learn a skilled trade to gain some valuable life skills and work experience, as well as save money to self-fund my college education for when I was certain about what I wanted to do," he explains.

"At 16, I toured the Welding and Sheet Metal (WSM) fabrication program at my local career center, where I instantly fell in love with the program. I then enrolled in the two-year program starting my junior year."

He later decided to attend The Ohio State University (OSU) and pursue a degree in welding engineering, which granted new opportunities through hands-on experience. His first learning experience came as a Welder/Fabricator at Capital Welding, where he was involved in both shop and field settings through the assembly, cutting, and welding of parts according to the bill of materials and blueprint specifications. This opportunity gave him insight into what it is like to be a welder and helped prepare him for his future work as an engineer.

Murdoch's current job, his first position in the industry as an engineer, allows him to live and work in Aachen, Germany at Rheinisch-Westfalische Technische Hocschule Aachen (RWTH Aachen) by assisting a doctorate student with research through the DAAD RISE program. (Deutscher Akademischer Austauschdienst Research Internships in Science and Engineering is

Owen Murdoch

a competitive – less than 10 percent acceptance rate – program funded by the German government that is only available to students from the USA, UK, and Ireland.) They are working towards the development of a software that shows real-time simulation of the microstructure of a variety of metallic materials.

"The hands-on work I will be conducting to assist in this research is namely the conduction and/or evaluation of heat treatment, compression, and stress relaxation tests using a variety of testing machines," he explains.

Through his work and studies, Murdoch has dedicated significant time and interest to the field of welding and engineering, which has paid off through his scholarships and awards.

"One of the most exciting moments of my career was when I was awarded my first scholarship last year," he describes.

"It means a lot to be recognized for your hard work through being awarded scholarships, such as this one from MTI."

Murdoch says he has big plans ahead. He will pursue a master's degree starting in August 2021 at the Technical University of Munich, where he will conduct laser welding research in relation to battery cells and other automotive applications. Furthering his list of accolades, Murdoch says he also received a financial aid offer from the automotive company BMW.

"BMW has offered to fund my senior capstone project with OSU, using my research as the basis of the project as well as my future master's thesis," remarks Murdoch.

Through the generosity of MTI and BMW, he will also be able to pursue his other passions.

"I enjoy learning Germanic languages, travelling and experiencing other cultures," he concludes. "This is the reason I have studied Afrikaans, Dutch, and German; the latter of the two I will continue to study and hopefully become fluent in during my time in Germany."

Congratulations to the 2021 MTI Bert Krisher Scholarship recipients. We wish you luck in your future endeavors!

Technical Awareness Bulletins published by MTI are brief industry-related topics that have evergreen value and deliver quick answers to potentially save MTI members time and money. The Bulletins Committee develops ideas to produce new topics that will have an impact on MTI members and the industry, as well as regularly reviews and revises past bulletins to keep them up to date with best practices and industry standards.

In this issue of CONNECT, MTI is releasing two new bulletins published in June 2021 – No. 36 PTFE Expansion Joint and No. 37 Venting of PTFE Lined Pipe and Equipment. Technical Bulletins are available to members by logging in to the e-Library. They can be downloaded to edit for individual company needs. Publicly released bulletins can be downloaded as PDFs by visiting www.mti-global.org/participate/tac-bulletins.

Materials Technology Institute

Technical Awareness Bulletin

PTFE Expansion Joint | No. 36

Situation

For most of the components in use in chemical plants, such as vessels, columns, piping, valves, seals, hoses, and expansion joints, industry Recognized and Generally Accepted Good Engineering Practices (RAGAGEPs) concerning life cycle and integrity issues exist. Of interest for this article are expansion joints, which often receive less attention than other components in piping systems. Expansion joints, also called compensators or bellows, normally compress rather than expand and provide the necessary stress relief from thermal and mechanical forces, such as movements and vibrations during normal operations. The most commonly used expansion joints are either elastomeric with wire or fabric reinforcements or made of polytetrafluoroethylene (PTFE), a common fluoropolymer used for corrosion mitigation. Major chemical producers have banned the use of PTFE bellows in their plants due to poor reliability, inability to inspect, and numerous failures. Others use them when there is no other option available. However, the correct use of properly manufactured and designed bellows together with correctly qualifying fabricators/suppliers can provide significant advantages for plant design. Such bellows can even increase plant safety and reliability when isolating stress from sensitive equipment like graphite heat exchangers.

Problem

Unlike PTFE-lined piping, PTFE expansion joints have no external support or boundary protection. This shortcoming has led to catastrophic failures resulting in safety, health, and environmental incidents. Failures of PTFE expansion joints have been from both deficiencies in manufacturing and issues related to improper installation or application. Manufacturing deficiencies that can arise include the base PTFE material, the sintering process, reshaping procedures, and general quality control. These manufacturing issues can manifest as premature failures and ruptures in the longitudinal or circumferential direction, as well as irregular waveforms and amorphous regions increasing permeability. Given a PTFE expansion joint free of manufacturing defects, issues can also result from design and installation deficiencies. Piping system design must take into consideration the lack of axial and lateral stiffness of a non-metallic joint, as well as the increase in axial forces in the piping system resulting from the outer convolution diameter. Improper installation and exceedances during operation such as over-pressurization and excessive displacements can lead to failures as well. Compounding the problem is the lack of design criteria, inspection protocols, poorly understood application and installation procedures, and adequate industry standards.

Information

MTI is bringing about awareness of the problems with PTFE bellows through a TAC Awareness Bulletin, MTI project work and a webinar addressing possible solutions to using PTFE bellows. The webinar highlights the multi-party effort in Europe, which shows the state of the art of dealing with the lifecycle issues of PTFE bellows.

Solution

European efforts indicate that PTFE bellows specified in the following manner will help in providing reliable and safe operation. Every PTFE bellows manufacturer must provide pressure-temperature ratings for their bellows based on the following test procedures to qualify the bellows:

1. Bursting pressure tests at ambient temperature are to be conducted with at least two bellows of the same type and size. The lower bursting pressure of the two tests is to be divided by a safety factor of 6. Larger bellows with lower bursting pressure than 700 psi can be divided by a safety factor of 4.

2. Operating pressures at temperatures higher than ambient are to be defined by Internal Pressure Creep (IPC) tests, ideally executed by a third party. This IPC test involves 10 bellows of the same type and size pressurized at different pressures while these are all constantly heated at 304 °F. It is important to measure the time from pressurizing to the failure. One bellows needs to be under pressure at 304 °F for at least one year. The results typically give a straight line when plotting the failure points on a double logarithm Pressure/Time graph as shown in Figure 1. The starting point is achieved through an additional pressure increase test of 2 bellows of the same type and size where the pressure is increased by 3.6 psi/h until failure.

   The resultant straight line needs to be extrapolated to 10 years and divided by a safety factor between 1.6–2.4 (ideally 2.0 for standard applications) to arrive at the maximum allowable operating pressure in the supplier´s pressure-temperature chart.

3. The PTFE wall thickness tolerance at the convolution area should not be more than ±5%.

4. Confirmation by the PTFE bellows manufacturer must be made that the bellows produced are identical to those that are tested. Any change in the production process, wall thickness, geometry, or PTFE resin will generate significant deviation from the test results achieved in the IPC test. Therefore, it is also mandatory that the PTFE bellows suppliers are ISO 9001 certified.

March 2021

This report is subject to later revision. MTI assumes no responsibility for the contents or for results associated with implementing any recommendations.

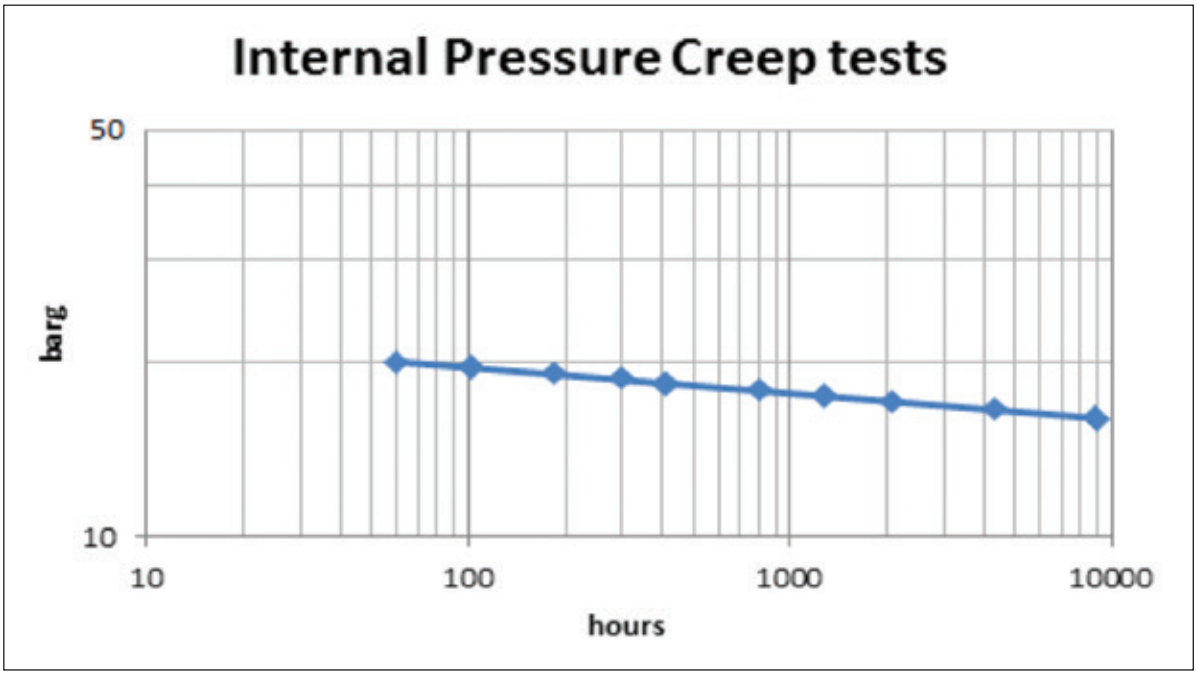

Figure 1 shows an example of an internal pressure creep test of 10 PTFE bellows performed at 304 °F.

Materials Technology Institute

Technical Awareness Bulletin

Venting of PTFE Lined Pipe & Equipment | No. 37

Permeation Through Plastics

What is Permeation?

Permeation is the molecular transport of a chemical component through a polymer. In any polymer/fluid (either gas or liquid), a degree of permeation is inevitable. The driving force behind permeation is chemical potential, normally quantified as concentration or pressure gradient. Combining Henry's law governing solubility and Fick's laws of diffusion, the permeation flow Q through a flat membrane can be described by:

$$Q = P \cdot A \cdot \Delta p/d \quad [1]$$

with P the permeation coefficient, a material, chemical and temperature dependent parameter, A the membrane area, Δp the vapor pressure gradient over the membrane and d the membrane thickness.

In other words, permeation is the product of solubility and diffusion of a chemical component in a polymer.

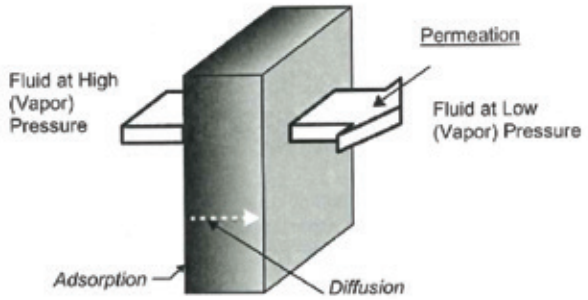

Figure 1. Permeation

What are the effects?

Permeation can have several effects, often detrimental to the operating life of polymer lined systems in chemical environments. The most important being:

- Corrosion of the steel or FRP structural substrate behind the polymer liner
- Pressure build-up behind loose liner systems (Figure 2)
- Blister formation via condensation inside a polymer liner
- Swelling, discoloration
- Fugitive emission

Figure 2. Liner deformation due to pressure build-up behind a PTFE liner.

How can we lower permeation rates?

Formula [1] gives guidance for ways to reduce permeation:

- P can be lowered by selection of a polymer material with a low permeation coefficient for a given medium (chemical, temperature)
- In most cases P is also lower at lower operating temperature
- Lowering the vapor pressure gradient e.g. via lowering the temperature gradient by proper insulation, or lower operating temperature
- Increasing the liner thickness

How can the effects be controlled?
Proper insulation not only lowers the driving force for permeation, it can also avoid condensation of permeating species inside a liner or on steel substrates, reducing liner damage by blister formation and substrate corrosion.

If permeation cannot be lowered, effects like substrate corrosion and pressure build-up behind loose liner systems can be lowered by venting of the permeated chemicals.

ASTM F1545 requires a vent system for PTFE and PFA lined pipe and fittings. The vent-holes act as an early warning system in case of liner failure and allow permeating media to escape, lowering corrosion and preventing pressure build-up.

Studies have shown that PTFE vent coupling inserts help in channeling corrosive permeants away from the steel housing. They also help to avoid vent holes from plugging by corrosion products and by painting. Some insert designs extend up to the outside diameter (OD) of the steel wall, some are “through-wall” and rest on the liner OD (Figure 3 and 4).

Size of the vent-holes is typically 3 - 5 mm (1/8 - 3/16”), with lined pipe equipped with 1 or 2 vent-holes behind each flange. Lined equipment typically uses one vent-hole at each nozzle.

Vent-holes should always be positioned down in order to prevent moisture from collecting in the vent-hole or vent-hole insert.

The couplings may be connected to a vacuum system. This helps to remove permeants, pins the liner to the shell to better counter vacuum conditions in vessels, can be directed to an active leak detection and gives complete isolation from atmospheric moisture.

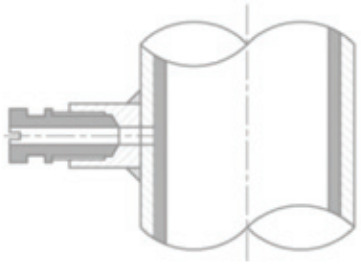

Figure 3. Standard insert, with click-on coupling

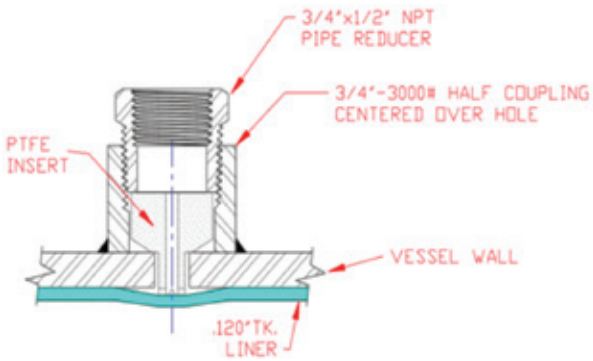

Figure 4. Through-wall design, with threaded coupling

References
R.P. Campion, Permeation through Polymers for the Chemical Process Industry and Other Sectors, MTI 2015, ISBN 987-1-57698-068-2

J.M. Kalnins, D. Yanik, Design, Installation, Maintenance and Inspection of Metallic Plastic-Lined Pipe, MTI 2016, ISBN 978-1-57698-073-6

ASTM F1545-15, Standard Specification for Plastic-Lined Ferrous Metal Pipe, Fittings and Flanges
Presentations from Pfaudler-Edlon, Resistoflex and CRP during Polymers PDC MTI AmeriTAC 133, 27 October 2020

March 2021

This report is subject to later revision. MTI assumes no responsibility for the contents or for results associated with implementing any recommendations.

STEVE SPRINGER NAMED MTI FELLOW

> CONTINUED FROM PAGE 3

industry with what we knew and what we did."

Among other interests, Springer says he has been fascinated with MTI's work on Intergranular Cracking of Cast Material, CN7M, a super austenitic stainless steel. "Time after time, we experienced unusual failures of CN7M castings in DuPont," he explains. "I found reports from 60 years ago that described the same thing that was happening to the CN7M castings but in different services. It was like we had not gotten anywhere. 'Why is this?' I really started getting into that, and we did some good work with John DuPont at Lehigh University, who helped us understand some things around heat treating the castings. That was very rewarding because it was good solid metallurgy. It was a long-standing issue that I thought we could improve on."

Project research isn't the only value of MTI membership that has drawn Springer's praise. Peers he has worked with/for have had an impact on him, and many of those business

Steve Springer

and mentee relationships have developed into long-term friendships. "Greg Kobrin, who was our Principal Consultant at DuPont (and an MTI Fellow since 2005), was very influential in just bringing MTI to my attention and how to conduct yourself in the community," he notes. "Greg was Mr. Class and certainly a role model for me." Springer adds that there were many people at MTI who influenced him, including Galen Hodge, John Aller, Dale Heffner and Gene Liening, among others. "With those guys, there is a common characteristic, although I can't put my finger on it," he points out. "But they were just like the cream of the technical knowledge, of involvement in the community, and of treating people right. I always felt accepted when I would be working with them. I just gravitated toward them and would observe them, and the proof was in the pudding. You could see what they could get done by doing what they did and the way that they did it."

MTI offered Springer his own leadership opportunities, often putting him in the spotlight at TAC Meetings and giving him the chance to prove himself in front of those he admired. From providing project team updates to participating in live technical forum debates, the collaborative process opened new avenues for him to polish his public speaking and other communications skills. "Companies can do that during your career, but MTI offers that almost immediately if you so choose,"

MEMBERSHIP ANNOUNCEMENT

MTI TO CONDUCT ELECTRONIC VOTING FOR ANNUAL MEETING

The Annual Members Meeting will be held at the October 2021 AmeriTAC meeting and the ballot for this year's meeting will again be issued electronically. Last year, MTI held a virtual meeting due to the global pandemic, which required a different form of voting to accommodate the change in remote venue. MTI leadership concluded that this method makes sense following the success of electronic voting in 2020 and the likelihood of holding a hybrid meeting this fall.

The ballot will be issued through SurveyMonkey. It is a secure method of balloting with access restricted to the Designated Representative or their officially designated proxy. The deadline for ballot submission will be approximately three days before the Annual Meeting on October 27. The ballot will be to set the number of Directors, establish 2023 membership dues and to elect the Directors and TAC Officers for the 2021-2022 term.

Designated Representatives will receive communication about voting in September. Please watch your email for instructions and be sure to submit your ballot in a timely fashion to ensure satisfying the quorum. Results will be reported during the Annual Meeting and officially recorded in the meeting minutes. ▪

he observes. "You can get involved with MTI, be a new person, pick out a project, and work on leadership development, and you won't get that in many other places, I don't think. There is the actual mechanics of doing that, but there is also hopefully instilling in others a vision. Maybe it's just a vision of how to conduct yourself as a professional. That's a more subtle leadership aspect."

Although he has taken on many important roles within MTI, Springer never envisioned that he would be named an MTI Fellow. He is about as humble about the honor as one could be: "I'm flattered beyond all description. I looked at the website and saw the pictures of all these icons in the business and of all the people who passed through MTI. There are only 17 names, and I'll be the 18th. That is just astounding to me!"

It means so much to him that he has to pause to gather his thoughts. "I think early on, the term Fellow just meant some technical powerhouse, and it still is very important," he continues. "But as I get older, I'm thinking that it's these other qualities (like leadership and professionalism) that really define what a Fellow is. It took me a little while to pick up on that, but I can see it in that list of the folks we have there."

That said, Springer hopes to be more than another name on the honor roll. He plans to pass along as many best practices and words of wisdom as the members are willing to absorb. "I am looking forward, in the twilight of my career, to just trying to help out and impart knowledge to folks who I can lend a hand to and give them some ideas of what the experience has taught me," he says. "I think that it's a daunting challenge because the way that I grew up in the business is nothing like these young folks are growing up in the business with limited resources, limited funds, limited capability to travel and participate in things like this. The lack of colleagues around them that could help mentor them and steer them in the right direction, and the amount of effort they have to go through to get the network, that just fell in my lap. I'm a little intimidated by thinking that I could help them, but I'm willing to try."

In truth, Springer hasn't wasted any time. He is already putting the principle to practice, relaying lessons learned over the last five decades. "In my training of younger people in my consulting business, they would say, 'How did you work this job? How did you approach this problem?'" he reports. "I thought, 'Gee, how did I do that?' The answer was, "I really don't have a cookbook technique, but what I always came back to realizing was that I tried to treat my customers with respect. If I didn't know the answer, I would tell them I didn't know the answer, but I would promise to get them an answer in a certain time period. I would hold to that commitment. Just by having good moral guidance and treating people the right way, everything else fell into place."

Overall, things seem to be coming together nicely for MTI's latest Fellow. He plans to continue taking on a limited number of materials consulting gigs in order to help fund hobbies and other interests, like toys for his remote lake house in rural Tennessee. WEHL Consulting, his business, is derived from the first initials of his four grandsons, who also play a big role in his life these days (and may be the benefactors of those toys). "Anything I can do to be active with them and my wife is fun," he smiles.

After receiving his award face-to-many-faces at AmeriTAC 135 in Louisville, Springer is eager to get back to his loved ones, a good long drive due southwest. He is shaking hands with the small crowd that surrounds him, enjoying well-deserved recognition, saying "goodbye" for now. But the materials scientist in him can't help but discuss some of the exciting project ideas floating around the room. "I'm just looking to help out where I can," he tells us. "I just want to keep the ball rolling on some things." Guess what they say is true: you really can't keep a good man down. Congratulations to MTI's newest Fellow, Steve Springer. Welcome back to the vibrant technical community that you helped build and continue to support! ▪

A Legacy of Excellence

The MTI Fellow Award was created in 2000 to recognize individuals who have been instrumental in developing the organization's advancement in becoming a leader in the chemical processing industry. MTI Fellows are awarded a plaque, lapel pin, a special Fellow ribbon designation for meeting name tags, and letters of commendation. They receive lifetime invitations to attend MTI meetings and access to the Member area of the MTI website where they are encouraged to lend their expertise by participating in person and online. Visit www.mti-global.org/about/fellows to learn about all 18 MTI Fellows. ▪

Materials Technology Institute
1001 Craig Road, Suite 490
St. Louis, MO 63146
www.mti-global.org

MTI SCHOLARSHIP APPLICATIONS FOR 2022 OPEN SEPTEMBER 1

TWO $5,000 AWARDS AVAILABLE

The Materials Technology Institute seeks college students who show an interest in pursuing a career related to Materials Engineering in the Process Industries to apply for the prestigious 2022 Bert Krisher Memorial Scholarship. MTI selects two applicants to receive the award, which includes $5,000 each to help cover educational expenses. Students may begin applying September 1, 2021.

Undergraduate students from around the world, who meet the following criteria, are eligible to apply:

- Enrollment in Materials Engineering, Materials Science, Corrosion Engineering, and other relevant programs
- List of Relevant Coursework (completed or scheduled)
- List of Academic Achievements
- List of Personal and Professional activities
- Work Experience
- Letters of Recommendation.

"This scholarship is addressing the primary objective of encouraging qualified engineers to pursue a career in Process Industries-related Materials Engineering," notes Srini Kesavan (FMC), Scholarship Committee Chair. Previous scholarship winners have been from many different schools in the USA and Europe. The majority of them are now employed as full-time materials engineers within the Process Industries."

MTI members will have access to this pool of applicants for consideration as interns/co-ops and possible development as future employees. For students, winning an MTI Scholarship offers the unique opportunity to network and build future working relationships with some of the most notable engineers in the process industries. Having the chance to attend an AmeriTAC Meeting is a highly regarded benefit of winning the MTI scholarship.

Applications, requirements, instructions, selection process details, and more are available at www.nace-foundation.org. To enter, all required paperwork must be received no later than January 1, 2022. ▪